AUDIO VIDEO SURROUND RECEIVER

# KR-V999D/1090VR

# SERVICE MANUAL

KENWOOD

© 1997-4/B51-5303-00 (K/K) 3513

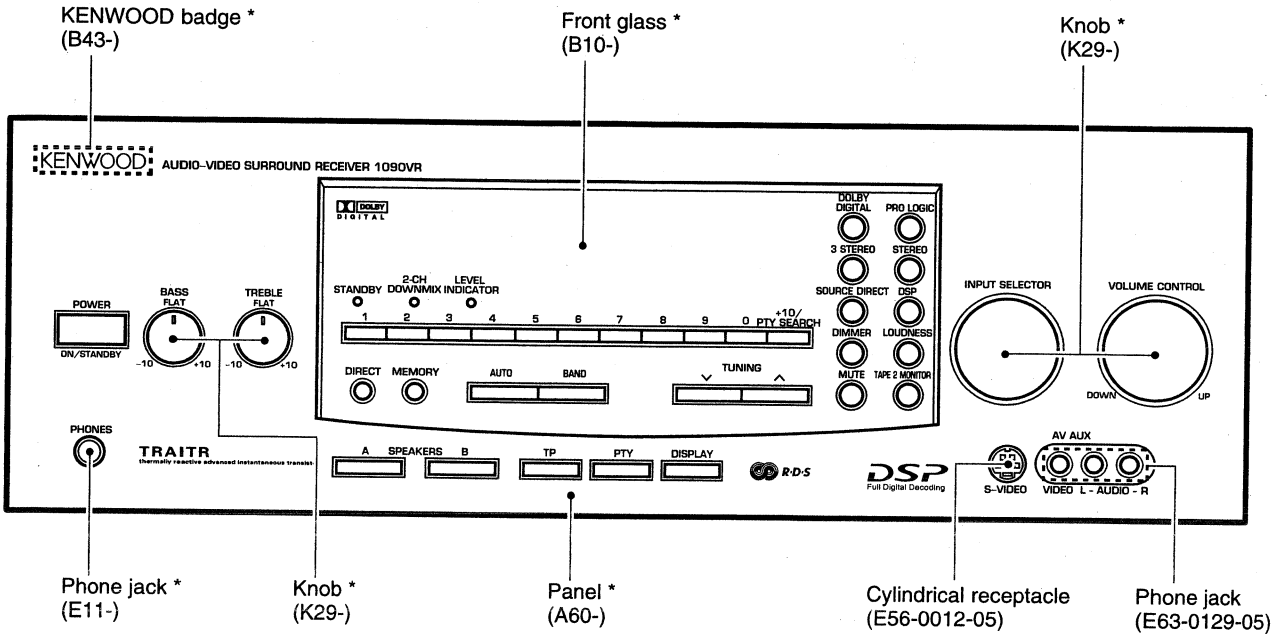


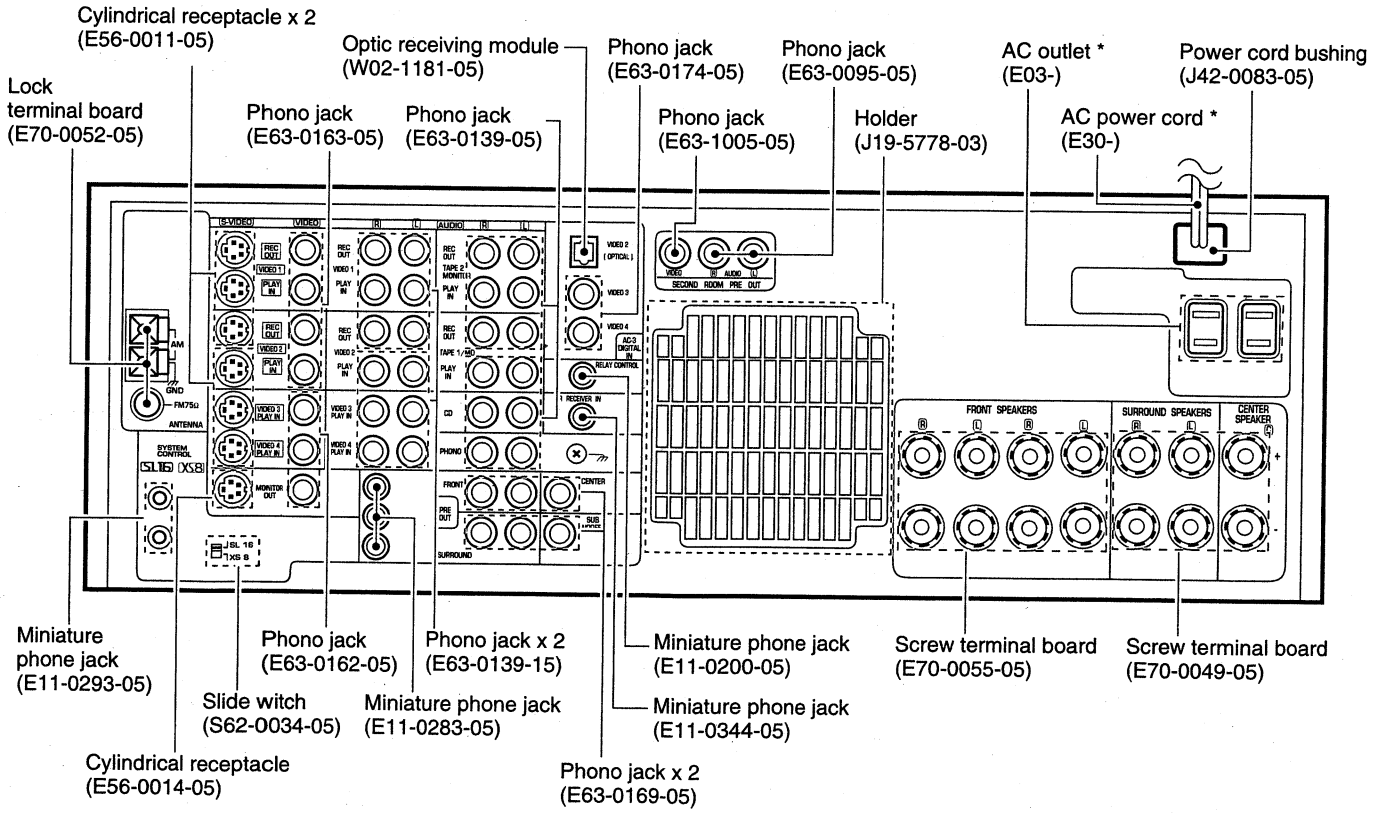


**Illustration is KR-1090VR.**

*** Refer to parts list on page 67.**

# KR-V999D/1090VR

## CONTENTS / ACCESSORIES

### Contents


CONTENTS / ACCESSORIES ..... 2
CONTROLS ..... 3
DISASSEMBLY FOR REPAIR ..... 5
BLOCK DIAGRAM ..... 6
CIRCUIT DESCRIPTION ..... 8
ADJUSTMENT ..... 18
WIRING DIAGRAM ..... 19
PC BOARD ..... 22
SCHEMATIC DIAGRAM ..... 35
EXPLODED VIEW ..... 66
PARTS LIST ..... 67
SPECIFICATIONS ..... 82


### Accessories

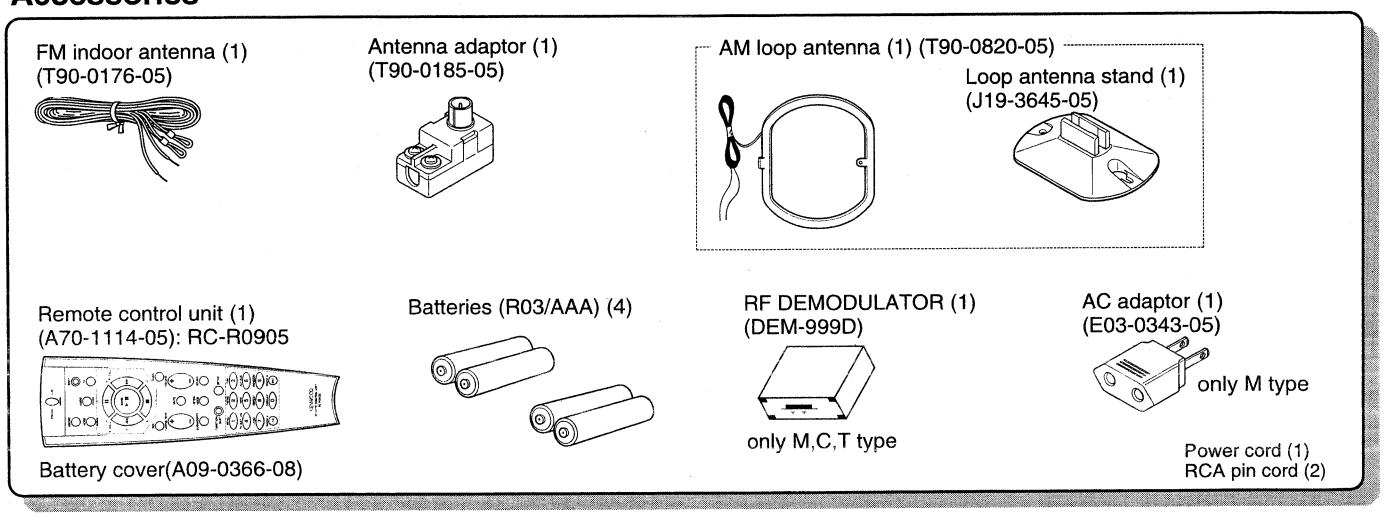


Refer to service manual of model names **DEM-999D(part number B51-5294-00)**, when **RF DEMODULATOR(DEM-999D)** is repaired.

**1090VR** is a model name of case that the destination of **KR-V999D** is KPY.

In a circuit explanation part, **1090VR** is expressing as **KR-V999D**.

## CONTROLS

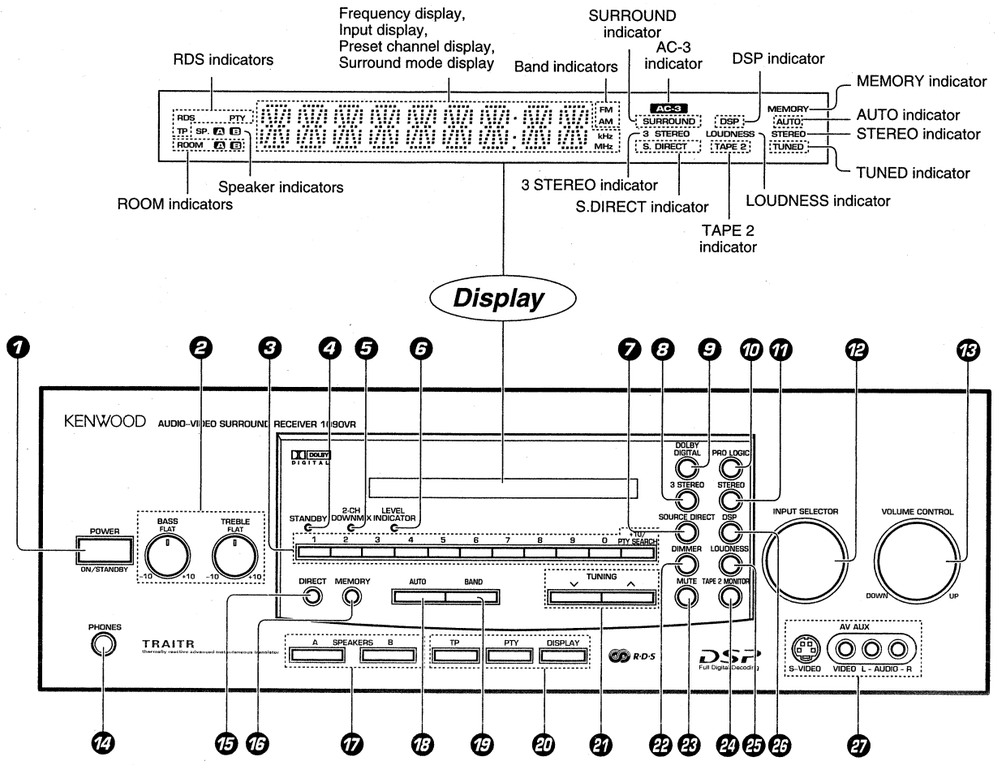


❶ **POWER key**
Use to switch the power ON/STANDBY.

❷ **Tone Control knobs**

❸ **Numeric keys**

❹ **STANDBY indicator**

❺ **2 CH DOWNMIX indicator**
Lights when an DOLBY DIGITAL (AC-3) format signal is being downmixed to 2 channel stereo.

❻ **LEVEL indicator**
Lights when the level of the signal being input is too high.

❼ **SOURCE DIRECT key**

❽ **DOLBY 3 STEREO key**
Use to turn on the DOLBY 3 STEREO mode.

❾ **DOLBY DIGITAL key**
Use to turn on the DOLBY DIGITAL (AC-3) mode.

❿ **PRO LOGIC key**
Use to turn on the DOLBY PRO LOGIC mode.

⓫ **STEREO key**
Use to cancel the surround mode.

⓬ **INPUT SELECTOR knob**
Use to select the input sources.

⓭ **VOLUME CONTROL knob**

⓮ **PHONES jack**
Use for headphone listening.

⓯ **DIRECT key**
Use to tune radio stations directly by numerical input.

⓰ **MEMORY key**
Use to store radio stations in the preset memory.

⓱ **SPEAKERS A/B keys**
Use to turn the speakers ON/OFF.

⓲ **AUTO key**
Use to select the auto tuning mode.

⓳ **BAND key**
Use to select the broadcast band.

⓴ **RDS keys**

㉑ **TUNING keys**
Use to tune in radio broadcasts.

㉒ **DIMMER key**
Use to adjust the brightness of the display.

㉓ **MUTE key**
Use to mute the sound.

㉔ **TAPE 2 MONITOR key**
Use to monitor a recording.

㉕ **LOUDNESS key**
Use to activate the frequency weighting network.

㉖ **DSP key**
Use to turn on, or switch, the DSP mode.

㉗ **AV AUX jacks**

***About the STANDBY indicator***

This unit has a **STANDBY** indicator. When the **STANDBY** indicator is lit, the unit consumes a small amount of power to preserve the memory. This is called STANDBY mode. This mode also lets you turn the power ON using the remote control.





## REMOTE CONTROL OPERATION

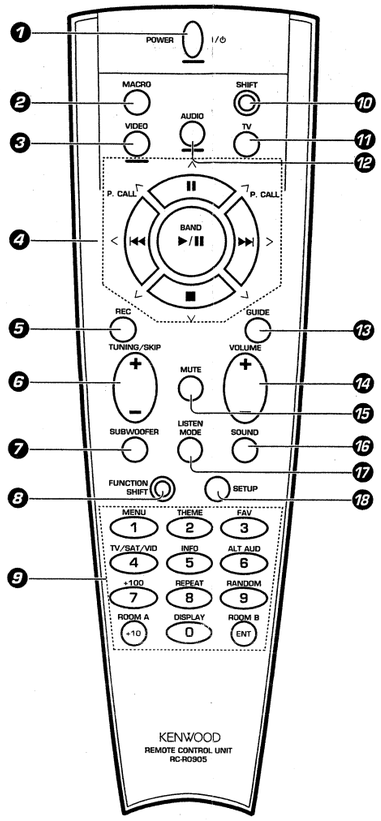


❶ **POWER key**
Use to turn the receiver on and off.
Use in combination with the input selector (AUDIO, VIDEO, or TV) keys and SHIFT key to turn various components on and off.

❷ **MACRO key**
Use in combination with the AUDIO, VIDEO, or TV keys to execute a series of commands automatically (MACRO PLAY).

❸ **VIDEO selector key**
Selects the video inputs (VIDEO 1, VIDEO 2, VIDEO 3, VIDEO 4, AV AUX) and sets the remote to operate the component registered at the respective input.

❹ **Multi control keys**
Use to operate the selected component and to operate the on-screen display.

❺ **REC key**
Use to operate the selected component.

❻ **TUNING/SKIP key**
Use during the setup procedure to specify various settings. Use to operate the tuner or selected component.

❼ **SUBWOOFER key**
Use in combination with the VOLUME +/- keys to adjust the volume of the subwoofer.

❽ **FUNCTION SHIFT key**
Use in combination with the numeric keys to execute alternate commands.

❾ **Numeric keys**
Provide functions identical to those of the original remote supplied with the component you are controlling.
To access the functions printed above the keys, Press within 3 seconds of pressing the FUNCTION SHIFT key. Function availability varies for each component.

❿ **SHIFT key**
Use in combination with the AUDIO and VIDEO keys to change the remote control mode without changing the input selector or in combination with the POWER key to turn on and off components programmed into the remote.

⓫ **TV selector key**
Sets the remote to operate a TV or cable box (TV 1, TV 2, CABLE). This key does not change the input selector on the receiver.

⓬ **AUDIO selector key**
Selects the audio inputs (CD, TAPE1/MD. TUNER, PHONO) and sets the remote to operate the respective KENWOOD audio component.
If you connect audio components from KENWOOD and other makers to the TAPE1/MD or CD jacks, you can set the remote to operate these components by registering the appropriate setup code at the respective input.

⓭ **GUIDE key**
Use to activate the OSD menu functions of registered components.

⓮ **VOLUME key**
Use to adjust the receiver volume.

⓯ **MUTE key**
Use to temporarily mute the sound.

⓰ **SOUND key**
Use to activate the Sound OSD and set the remote to OSD control mode.

⓱ **LISTEN MODE key**
Use to select the desired surround mode.

⓲ **SETUP key**
Use to activate the Setup OSD and set the remote to OSD control mode.

## REMOTE CONTROL OPERATION

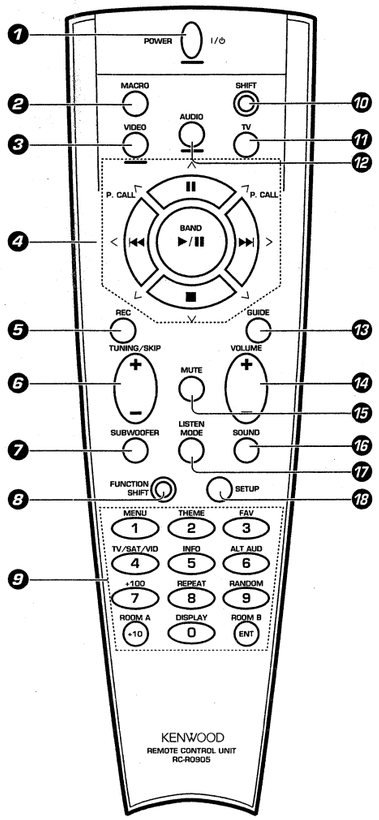


**❶ POWER key**
Use to turn the receiver on and off.
Use in combination with the input selector (AUDIO, VIDEO, or TV) keys and SHIFT key to turn various components on and off.

**❷ MACRO key**
Use in combination with the AUDIO, VIDEO, or TV keys to execute a series of commands automatically (MACRO PLAY).

**❸ VIDEO selector key**
Selects the video inputs (VIDEO 1, VIDEO 2, VIDEO 3, VIDEO 4, AV AUX) and sets the remote to operate the component registered at the respective input.

**❹ Multi control keys**
Use to operate the selected component and to operate the on-screen display.

**❺ REC key**
Use to operate the selected component.

**❻ TUNING/SKIP key**
Use during the setup procedure to specify various settings. Use to operate the tuner or selected component.

**❼ SUBWOOFER key**
Use in combination with the VOLUME +/- keys to adjust the volume of the subwoofer.

**❽ FUNCTION SHIFT key**
Use in combination with the numeric keys to execute alternate commands.

**❾ Numeric keys**
Provide functions identical to those of the original remote supplied with the component you are controlling.
To access the functions printed above the keys, Press within 3 seconds of pressing the FUNCTION SHIFT key. Function availability varies for each component.

**❿ SHIFT key**
Use in combination with the AUDIO and VIDEO keys to change the remote control mode without changing the input selector or in combination with the POWER key to turn on and off components programmed into the remote.

**⓫ TV selector key**
Sets the remote to operate a TV or cable box (TV 1, TV 2, CABLE). This key does not change the input selector on the receiver.

**⓬ AUDIO selector key**
Selects the audio inputs (CD, TAPE1/MD. TUNER, PHONO) and sets the remote to operate the respective KENWOOD audio component.
If you connect audio components from KENWOOD and other makers to the TAPE1/MD or CD jacks, you can set the remote to operate these components by registering the appropriate setup code at the respective input.

**⓭ GUIDE key**
Use to activate the OSD menu functions of registered components.

**⓮ VOLUME key**
Use to adjust the receiver volume.

**⓯ MUTE key**
Use to temporarily mute the sound.

**⓰ SOUND key**
Use to activate the Sound OSD and set the remote to OSD control mode.

**⓱ LISTEN MODE key**
Use to select the desired surround mode.

**⓲ SETUP key**
Use to activate the Setup OSD and set the remote to OSD control mode.







## DISASSEMBLY FOR REPAIR

### Check the vertical PCB.

1. Remove the 32 screws (❶), then remove the rear panel.
2. Remove the 4 screws (❷), then remove the fuse PCB.
3. Connect the GND of the vertical PCB and the chassis, the GND of the speaker terminal and the chassis with 2 alligator clip(❸).
4. Remove a vertical PCB (❹), then check the vertical PCB.

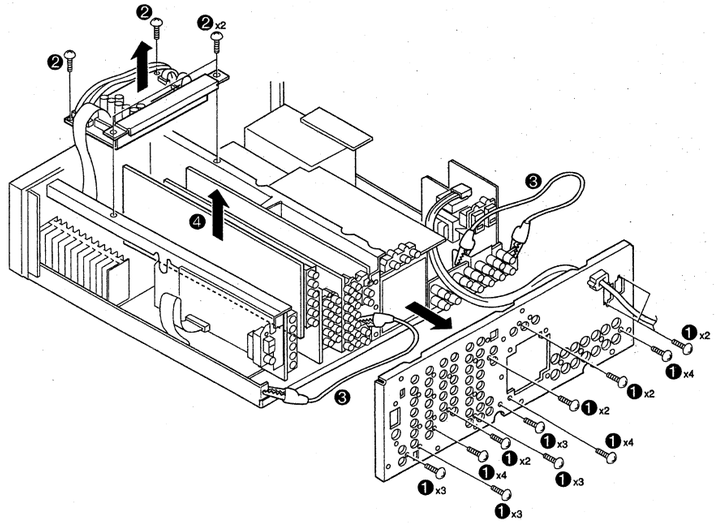

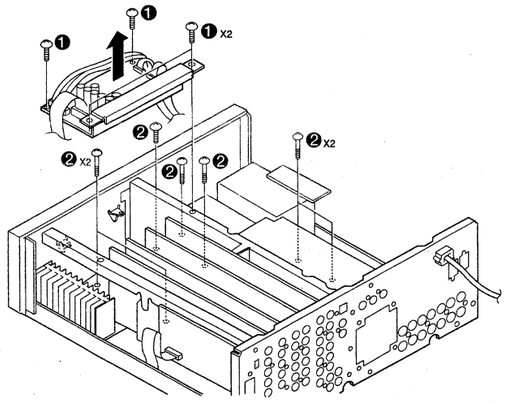

### Remove the bottom plate.

Make use of the changing final transistor etc.

1. Remove the 4 screws (❶), then remove the fuse PCB.
2. Remove the 7 screws (❷), then assemble the fuse PCB and the 4 screws (❶).
3. Lay the 2 boxes (❸), then upside down the KR-V999D.
4. Remove the 14 screws (❹) and PCB support, then remove the bottom plate.

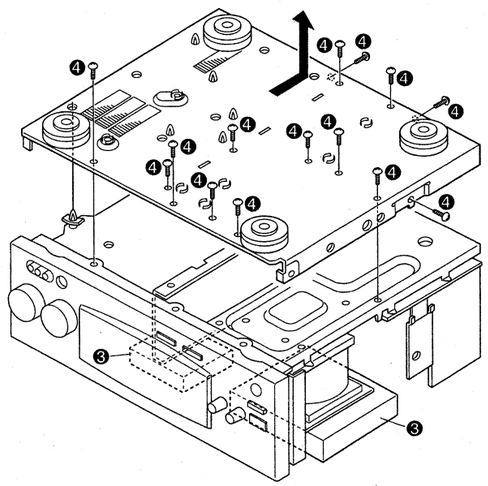

KR-V999D/1090VR



# BLOCK DIAGRAM

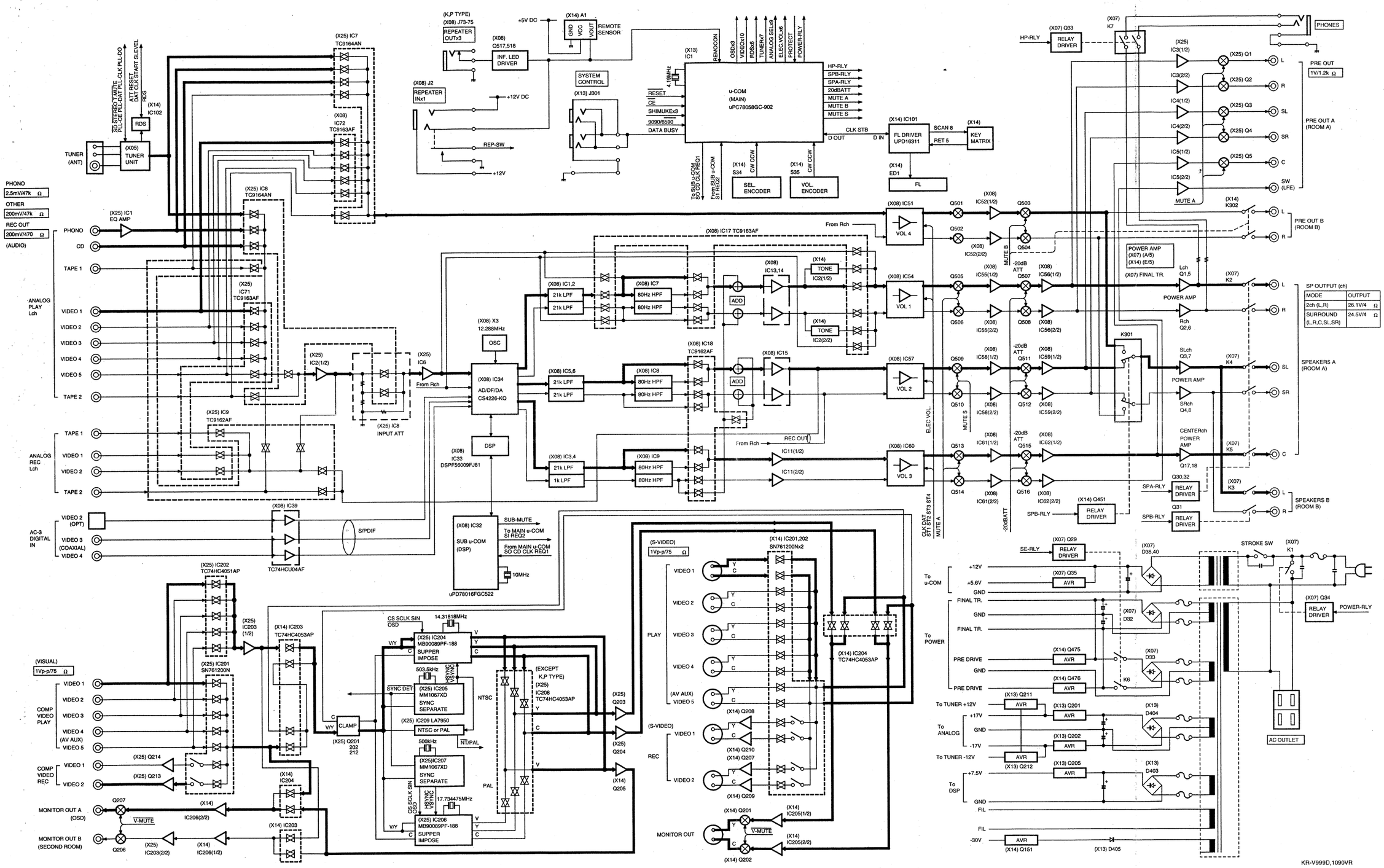


1. A init

POWE
MAIN
SOUN
PICTU
SPEA
SPEA
TAPE
SOUF
DIMM
LOUD
OSD I
FL DIS
SURF
FRON
CENT
REAF
SUB W
EACH
TONE
TONE
TUNIN
PRES

LAST
FM L/

AM L/

LAST
PTY S
PTY S
TP SE
RDS I
TA / N
OSD

2. The

- When
- When
- Wher conne
- If the of CH
- If all e
- If the state.
- Wher check

# K DIAGRAM

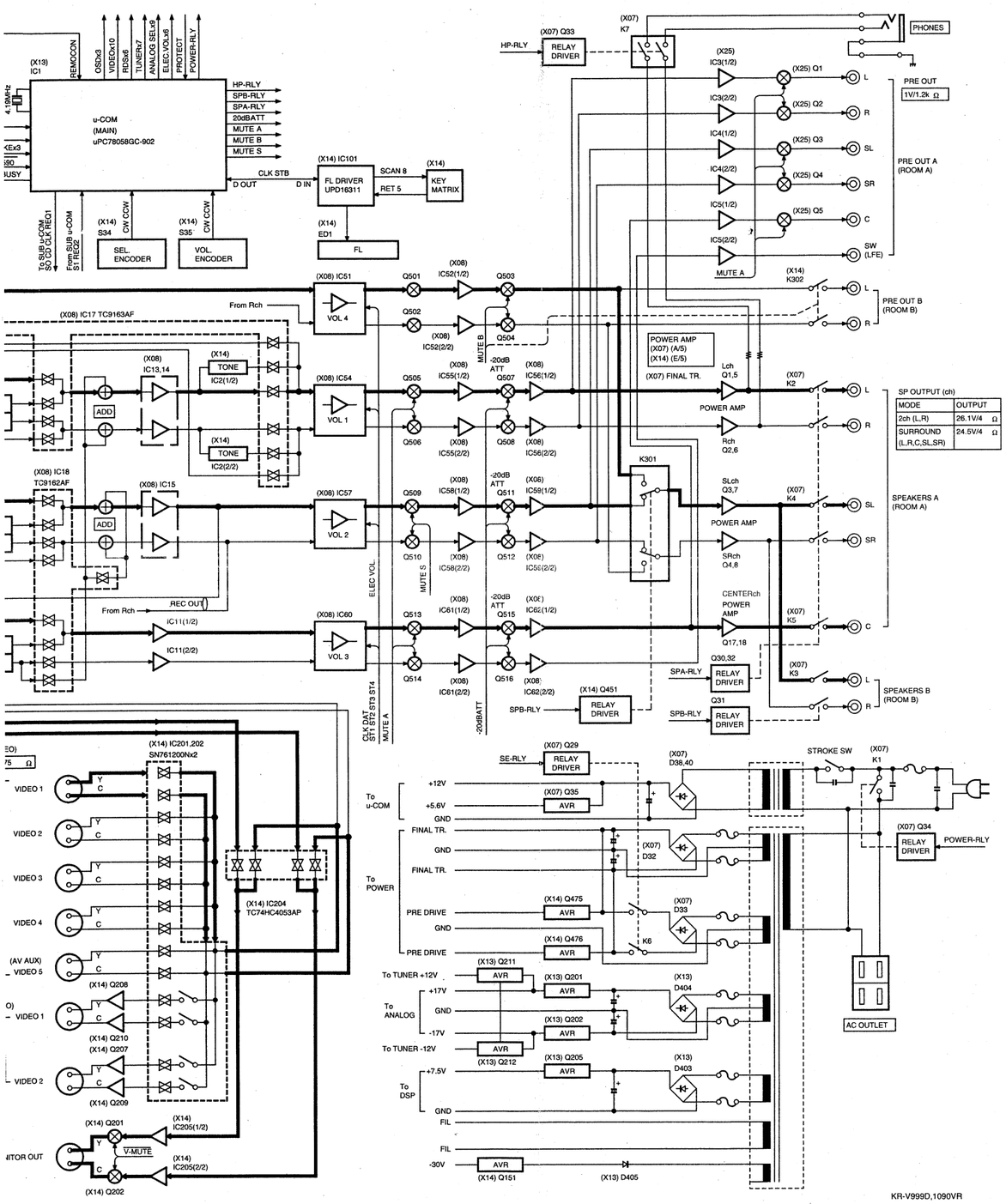




KR-V999D/1090VR

# CIRCUIT DESCRIPTION

## 1. A initialization condition

| | |
|---|---|
| POWER ON/OFF | : OFF |
| MAIN VOLUME LEVEL | : -66dB |
| SOUND INPUT SELECTOR (KR-V999D : ROOM A,B ) | : TUNER |
| PICTURE SIGNAL INPUT SELECTOR (KR-V999D : ROOM A,B ) | : VIDEO 1 |
| SPEAKER A | : ON |
| SPEAKER B | : OFF |
| TAPE 2 / MONITOR (KR-V999D ONLY) | : OFF |
| SOURCE DIRECT | : OFF |
| DIMMER | : DIMMER 1 |
| LOUDNESS | : OFF |
| OSD DISPLAY MODE | : ON |
| FL DISPLAY MODE | : SELECTOR |
| SURROUND MODE | : STEREO |
| FRONT SPEAKER | : LARGE |
| CENTER SPEAKER | : LARGE |
| REAR SPEAKER | : LARGE |
| SUB WOOFER | : OFF |
| EACH CHANNEL LEVEL | : 0dB |
| TONE BASS (KR-V888 ONLY ) | : 0dB |
| TONE TREBLE (KR-V888 ONLY ) | : 0dB |
| TUNING MODE | : AUTO |
| PRESET MEMORY | :TEST FREQUENCY (MAKER MEMORY ) |
| LAST BAND | : FM |
| FM LAST FREQUENCY | : 87.5MHz (Except J) |
| | : 76.0MHz (J) |
| AM LAST FREQUENCY | : 531kHz (CH.SP 9kHz) |
| | : 530kHz (CH.SP 10kHz) |
| LAST P.ch | : —ch |
| PTY SELECT MODE | : OFF |
| PTY SEARCH MODE | : OFF |
| TP SEARCH MODE | : OFF |
| RDS DISPLAY MODE | : PS MODE |
| TA / NEWS / INFO. | : OFF |
| OSD RT DISPLAY MODE | : ON |

## 2. The condition which each memory becomes the initial state.

- When fixation data is not a specified value, each memory becomes the initial state.
- When a test mode flag and all illumination flag are not set up at the time of a reset, each memory becomes the initial state.
- When KR-V999D is reset while pressing POWER switch, each memory becomes the initial state. (When AC plug is connected to an outlet)
- If the destination of a tuner is changing when KR-V999D is reset, each memory becomes the initial state. Or, if the condition of CH.SPACE switch is changing when KR-V999D is reset, each memory becomes the initial state.
- If all electron volume data are back-up previous condition, when KR-V999D is reset, each memory becomes the initial state.
- If the data of all electron volume is not agreeing completely when KR-V999D is reset, each memory becomes the initial state.
- When KR-V999D is reset the value of a memory is added. Or the value of a memory is added when back-up is done. And, a checksum is calculated. And, if the checksum that was calculated does not agree, each memory becomes the initial state.

④ Mute signal output
Because the analog mute always becomes OFF condition, it isn't possible to control absolutely. however, when the value with front volume is the minimum, it becomes an analog mute ON condition.

⑤ Sub microprocessor mute work
A sub microprocessor mute works, by pressing AUTO/MANUAL key. The work of a sub microprocessor mute is cancelled cyclically, by pressing AUTO/MANUAL key after that.
・ The display to this work is not displayed to an indicator tube.

⑥ Midnight work function.
The following work is done cyclically, each time TUNING-UP key is pressed.

⑦ Dolby System surround center mode function
The following display is displayed cyclically each time TUNING-UP key is pressed.

⑧ The sub woofer speaker ON/OFF setting
The setting of the existence or non-existence of a sub woofer speaker is able to set up cyclically each time MEMORY key is pressed.

⑨ TONE BASS/TREBLE. (KR-V888D/1080VR only)
The following display are done cyclically by pressing TONE BASS/TREBLE, when a test mode is working.

## 6. Microprocessor uPD78058GC-902 (X13-, IC1)

### 6-1 Microprocessor periphery block diagram

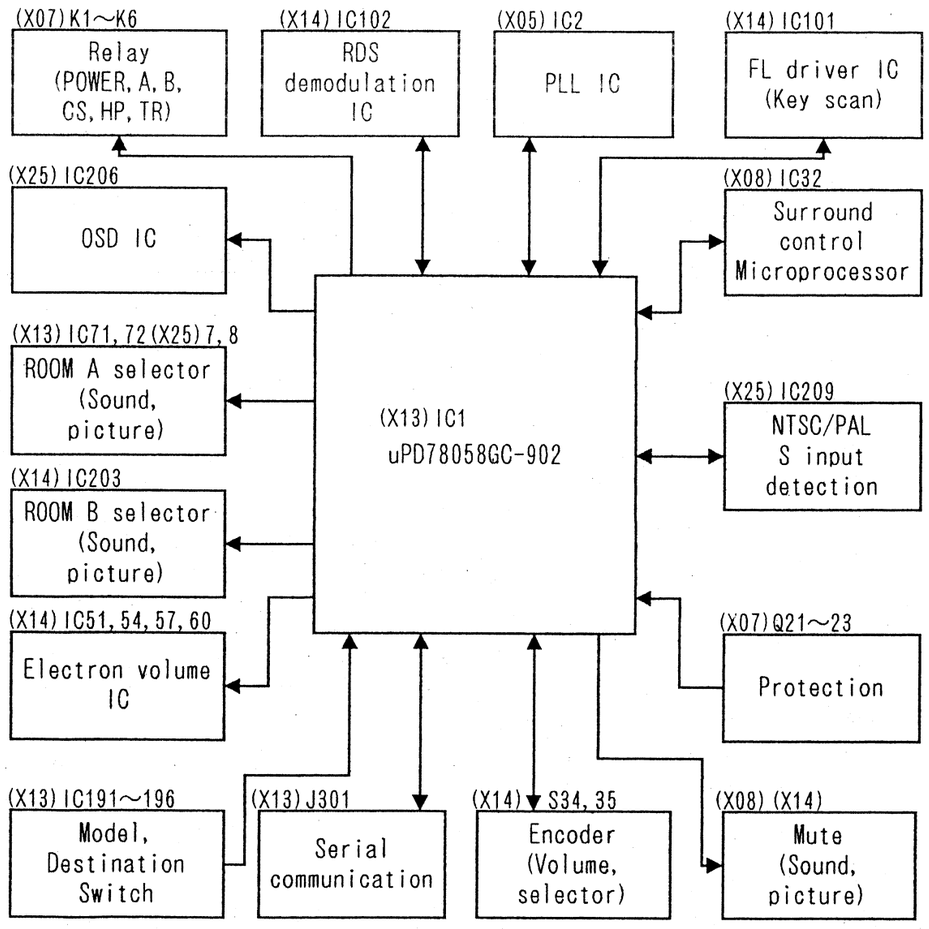




KR-V999D/1090VR
CIRCUIT DESCRIPTION

### 6-2. Terminal explanation

| Pin No. | Name | I/O | Description |
|---|---|---|---|
| 1 | RELAY_TR | O | Relay Secondary side of the transformer |
| 2 | RELAY_HP | O | Relay HEAD PHONE |
| 3 | PROTECT | I | Protection input |
| 4 | AVSS | — | GND for A/D |
| 5 | SUB_RESET | O | Sub microprocessor RESET |
| 6 | OSD_CS1 | O | MB90089 CS1 for NTSC |
| 7 | AVREF1 | — | Unuse |
| 8 | 8/$\overline{16}$ | I | Serial 8/16 bit judgement terminals |
| 9 | OSD_SIN | O | MB90089 SIN |
| 10 | OSD_SCLK | O | MB90089 SCLK |
| 11 | SUB_SI | I | Control microprocessor communication SI |
| 12 | SUB_SO | O | Control microprocessor communication SO |
| 13 | SUB_CLK | O | Control microprocessor CLK |
| 14 | SUB_REQ1 | O | Control microprocessor REQ1 |
| 15 | SUB_REQ2 | I | Control microprocessor REQ2 |
| 16 | FL_DOUT | I | UPD16311 DOUT (key scan) |
| 17 | FL_DIN | O | UPD16311 DIN (display data output) |
| 18 | FL_CLK | O | uPD16311 CLK |
| 19 | 999D/888D | I | KR-V999D/888D switching switch |
| 20,21 | SEL_1,SEL_2 | I | Selector encoder input 1 input 2 |
| 22,23 | VOL_1, VOL_2 | I | Volume encoder input 1 input 2 |
| 24 - 26 | TSW_0 - TSW_2 | I | Destination switching switch 0 - switch 2 |
| 27 | FL_STB | O | uPD16311 STB |
| 28 | VSEL_DATA | O | NJU3713 (expansion IC for picture selector) DATA |
| 29 | VSEL_CLK | O | NJU3713 (expansion IC for picture selector) CLK |
| 30 | VSEL_STB | O | NJU3713 (expansion IC for picture selector) STB |
| 31 | — | — | Unuse |
| 32 | S_SW | I | S detection |
| 33 | VSS | — | |
| 34 | OSD_CS2 | O | MB90089 CS2 for PAL |
| 35 | NTSC_PAL_OUT | O | $\overline{\text{NTSC}}$/PAL switching output |
| 36 | NTSC_PAL_IN | I | $\overline{\text{NTSC}}$/PAL switching input |
| 37 | LOUDNESS | O | LOUDNESS control |
| 38,39 | — | — | Unuse |
| 40 | SEL_STB1 | O | NJU731x STB for ROOM A |
| 41 | SEL_STB2 | O | NJU731x STB for ROOM B |
| 42 | VOL_CE | O | TC9412 CE |
| 43 | COM_DATA | O | TC916x,TC9412 DATA |
| 44 | COM_CLK | O | TC916x,TC9412 CLK |
| 45 | SBUSY | I/O | Serial BUSY |
| 46 | SDATA | I/O | Serial DATA |
| 47 | $\overline{\text{MUTE_A}}$ | O | ROOM A mute |
| 48 | $\overline{\text{MUTE_B}}$ | O | ROOM B mute |
| 49 | SYNC_DET | I | OSD picture synchronous signal detection |
| 50 | V_MUTE | O | VIDEO MUTE |

| Pin No. | Name | I/O | Description |
|---|---|---|---|
| 51 | -20dB_MUTE | O | -20dB MUTE |
| 52 | EXT_OUT | O | EXTERNAL OUT |
| 53 | T_MUTE | O | Tuner mute |
| 54 | PLL_CLK | O | LC72131 CLK |
| 55 | PLL_DATA | O | LC72131 DATA |
| 56 | PLL_CE | O | LC72131 CE |
| 57 | SD | I | SD input |
| 58 | STEREO | I | STEREO input |
| 59 | PLL_DO | I | LC72131 DO |
| 60 | RESET | I | Reset |
| 61 | REMOCON | I | Remote controller input |
| 62 | TSW_3 | I | Destination switching switch 3 (CH, SPACE) |
| 63 | RDS_DATA | I | RDS DATA |
| 64 | RDS_CLK | I | RDS CLK |
| 65 | TSW_4 | I | Destination switching switch 4 |
| 66 | — | — | Unuse |
| 67 | CE | I | Backup |
| 68 | VDD | — | Power supply+5V |
| 69 | X2 | — | System clock connection |
| 70 | X1 | I | System clock connection |
| 71 - 73 | — | — | Unuse |
| 74 | AVDD | — | Analogue power supply for A/D |
| 75 | AVREF0 | — | Standard voltage input for A/D |
| 76 | RDS_SLEVEL | I | RDS S_LEVEL |
| 77 | RELAY_POWER | O | Relay POWER |
| 78 | RELAY_A | O | Relay ROOM A |
| 79 | RELAY_B | O | Relay ROOM B |
| 80 | RELAY_CS | O | Relay CENTER SURROUND |





## 7. Sub-microprocessor uPD7801FGC526 (X08-: IC32)

### 7-1 Microprocessor periphery block diagram

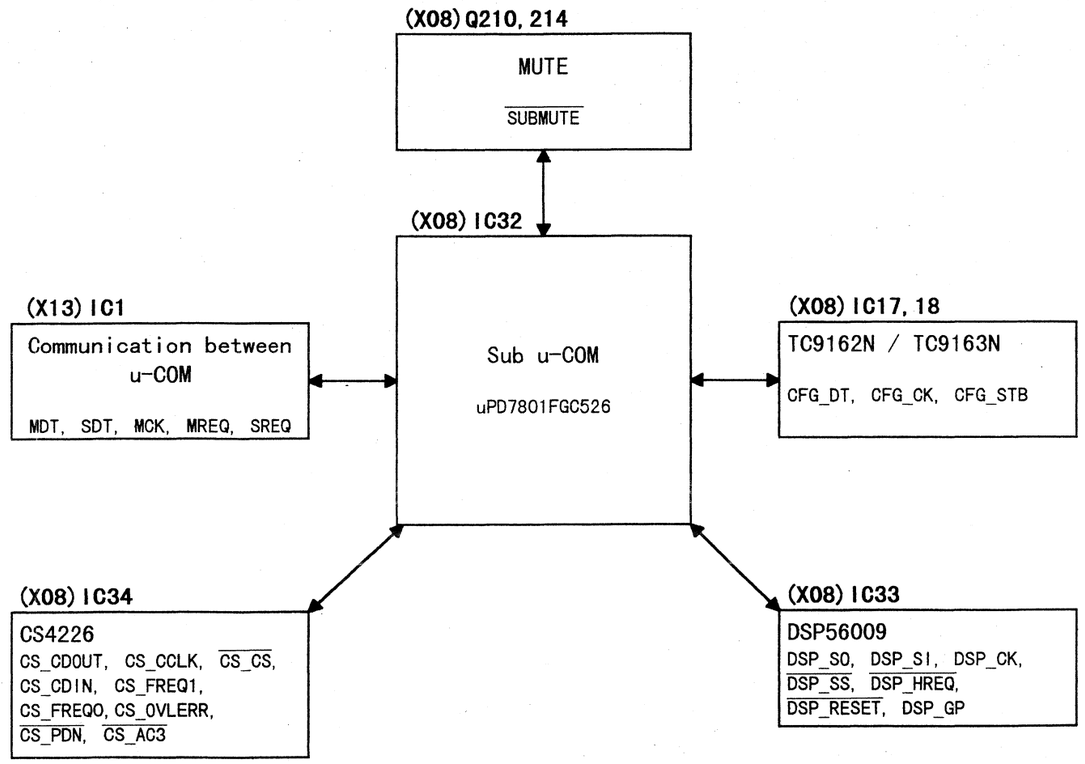


### 7-2 Terminal explanation (submicroprocessor)

| PIN NO. | NAME | I/O | DESCRIPTION |
|---|---|---|---|
| 1 | DSP_SS | O | DSP56009 SS |
| 2 | DSP_HREQ | I | DSP56009 HREQ |
| 3 | DSP_RESET | O | DSP56009 RESET |
| 4,5 | NC | I | UNUSE |
| 6 | CFG_DT | O | TC9162N/TC9163N DATA |
| 7 | CFG_CK | O | TC9162N/TC9163N CLOCK |
| 8 | CFG_STB | O | TC9162N//TC9163N STROBE |
| 9 | VSS | | GND |
| 10-12 | NC | O | UNUSE |
| 13 | AD_SEL | O | ST.PCM/AC3 2ch DOWN MIX :L ELSE : H |
| 14-17 | NC | O | UNUSE |
| 18 | CS_CDOUT | I | CS4226 DATA IN |
| 19 | CS_CCLK | O | CS4226 CLOCK |
| 20 | CS_CS | O | CS4226 CHIP SELECT |

## CIRCUIT DESCRIPTION

| PIN NO. | NAME | I/O | DESCRIPTION |
|---|---|---|---|
| 21 | CS_CDIN | O | CS4226 DATA OUT |
| 22 | CS_FREQ1 | I | CS4226 FS CHECK |
| 23 | CS_FREQ0 | I | CS4226 FS CHECK |
| 24 | VSS | | GND |
| 25 | $\overline{\text{CS_PDN}}$ | O | CS4226 POWER DOWN PORT |
| 26 | $\overline{\text{CS_AUDIO}}$ | I | CS4226 $\overline{\text{AUDIO}}$ |
| 27-30 | NC | I | UNUSE |
| 31 | CS_OVL/ERR | I | CS4226 OVER LOAD//ERROR DETECT |
| 32 | $\overline{\text{SUBMUTE}}$ | O | ANALOG MUTE CONTROL |
| 33,34 | NC | I | UNUSE |
| 35 | $\overline{\text{RESET}}$ | I | u-COM RESET |
| 36 | CS_AC3 | I | CS4226 AC3 |
| 37-39 | NC | I | UNUSE |
| 40 | VDD | | +5V |
| 41 | X2 | O | CERAMICS |
| 42 | X1 | I | CERAMICS |
| 43 | IC(VPP) | | GND |
| 44 | XT2 | | OPEN |
| 45 | NC | I | +5V |
| 46 | AVSS | | GND |
| 47,48 | NC | I | UNUSE |
| 49 | $\overline{\text{TEST_T}}$ | O | TEST TONE OFF/ON ON : LOW / OFF : HIGH |
| 50-53 | NC | I | UNUSE |
| 54 | DSP_GP | O | DSP56009 GP10PIN |
| 55 | AVDD | | +5V |
| 56 | AVREF | I | GND |
| 57 | MDT | I | Communication between u-COM MASTER DATA |
| 58 | SDT | O | Communication between u-COM SLAVE DATA |
| 59 | MCK | I | Communication between u-COM MASTER CLOCK |
| 60 | MREQ | I | Communication between u-COM MASTER REQUEST |
| 61 | SREQ | O | Communication between u-COM SLAVE REQUEST |
| 62 | DSP_SQ | I | DSP56009 DATA IN |
| 63 | DSP_SI | O | DSP56009 DATA OUT |
| 64 | DSP_CK | O | DSP56009 CLOCK |

**Key matrix table**

| | ⑬ KS0 | ⑫ KS1 | ⑪ KS2 | ⑩ KS3 |
|---|---|---|---|---|
| ⑮KS1 | ——— | DOLBY PROLOGIC | DOLBY 3 STEREO | DOLBY AC-3 |
| ⑯KS2 | STEREO | DSP | SOURCE DIRECT | ——— |
| ⑰KS3 | LOUDNESS | MUTE | DIMMER | TAPE2 |
| ⑱KS4 | TUNING DOWN | 0 | 9 | +10 |
| ⑲KS5 | 8 | TUNING UP | 6 | 7 |
| ⑳KS6 | BAND | AUTO / MANUAL | 4 | 5 |
| ㉑KS7 | ——— | PTY | RDS DISPLAY | TA / NEWS / INFO. |
| ㉒KS8 | SPEAKER A | MEMORY | 2 | 3 |
| ㉓KS9 | POWER | SPEAKER B | 1 | DIRECT |

※ The number inside ○ is a terminal number of IC101(X14).



KR-V999D/1090VR

CIRCUIT DESCRIPTION

### 8. Control list for the switch and the port

(1) Sound system selector ROOM A (0 : SW OFF / 1 : SW ON)

| | | X25(IC9) | (X08)IC71 | | | | | | (X08)IC72 | | | | | | (X25)IC8 | | | | | |
|---|---|---|---|---|---|---|---|---|---|---|---|---|---|---|---|---|---|---|---|---|
| | | ② ㉗ | ㉗ | ㉖ | ㉓ | ㉒ | ⑲ | ⑱ | ㉗ | ㉖ | ㉕ | ㉓ | ㉒ | ㉑ | ②㉗ | ③㉖ | ④㉕ | ⑤㉔ | ⑦㉒ | ⑧㉑ |
| TAPE 2 OFF | TUNER | 1 | 0 | 0 | 0 | 0 | 1 | 1 | 0 | 0 | 0 | 0 | 0 | 0 | 1 | 0 | 0 | 0 | 1 | 0 |
| | PHONO | 1 | 0 | 0 | 0 | 0 | 1 | 1 | 0 | 0 | 0 | 0 | 0 | 0 | 0 | 1 | 0 | 0 | 1 | 0 |
| | CD | 1 | 0 | 0 | 0 | 0 | 1 | 1 | 0 | 0 | 0 | 0 | 0 | 0 | 0 | 0 | 1 | 0 | 1 | 0 |
| | TAPE1 | 0 | 0 | 0 | 0 | 0 | 1 | 1 | 0 | 0 | 0 | 0 | 0 | 0 | 0 | 0 | 0 | 1 | 1 | 0 |
| | VIDEO1 | 1 | 1 | 0 | 1 | 0 | 0 | 1 | 0 | 0 | 0 | 0 | 0 | 0 | 0 | 0 | 0 | 0 | 1 | 0 |
| | VIDEO2 | 1 | 0 | 1 | 0 | 1 | 1 | 0 | 0 | 0 | 0 | 0 | 0 | 0 | 0 | 0 | 0 | 0 | 1 | 0 |
| | VIDEO3 | 1 | 0 | 0 | 0 | 0 | 1 | 1 | 1 | 0 | 0 | 1 | 0 | 0 | 0 | 0 | 0 | 0 | 1 | 0 |
| | VIDEO4 | 1 | 0 | 0 | 0 | 0 | 1 | 1 | 0 | 1 | 0 | 0 | 1 | 0 | 0 | 0 | 0 | 0 | 1 | 0 |
| | AV AUX | 1 | 0 | 0 | 0 | 0 | 1 | 1 | 0 | 0 | 1 | 0 | 0 | 1 | 0 | 0 | 0 | 0 | 1 | 0 |
| TAPE 2 ON | TUNER | 1 | 0 | 0 | 0 | 0 | 1 | 1 | 0 | 0 | 0 | 0 | 0 | 0 | 1 | 0 | 0 | 0 | 0 | 1 |
| | PHONO | 1 | 0 | 0 | 0 | 0 | 1 | 1 | 0 | 0 | 0 | 0 | 0 | 0 | 0 | 1 | 0 | 0 | 0 | 1 |
| | CD | 1 | 0 | 0 | 0 | 0 | 1 | 1 | 0 | 0 | 0 | 0 | 0 | 0 | 0 | 0 | 1 | 0 | 0 | 1 |
| | TAPE1 | 0 | 0 | 0 | 0 | 0 | 1 | 1 | 0 | 0 | 0 | 0 | 0 | 0 | 0 | 0 | 0 | 1 | 0 | 1 |
| | VIDEO1 | 1 | 1 | 0 | 1 | 0 | 0 | 1 | 0 | 0 | 0 | 0 | 0 | 0 | 0 | 0 | 0 | 0 | 0 | 1 |
| | VIDEO2 | 1 | 0 | 1 | 0 | 1 | 1 | 0 | 0 | 0 | 0 | 0 | 0 | 0 | 0 | 0 | 0 | 0 | 0 | 1 |
| | VIDEO3 | 1 | 0 | 0 | 0 | 0 | 1 | 1 | 1 | 0 | 0 | 1 | 0 | 0 | 0 | 0 | 0 | 0 | 0 | 1 |
| | VIDEO4 | 1 | 0 | 0 | 0 | 0 | 1 | 1 | 0 | 1 | 0 | 0 | 1 | 0 | 0 | 0 | 0 | 0 | 0 | 1 |
| | AV AUX | 1 | 0 | 0 | 0 | 0 | 1 | 1 | 0 | 0 | 1 | 0 | 0 | 1 | 0 | 0 | 0 | 0 | 0 | 1 |

(2) Sound system selector ROOM B (0 : SW OFF / 1 : SW ON)

| | (X08)IC71 | | | | | | (X08)IC72 | | | | | | (X25)IC27 | | | | |
|---|---|---|---|---|---|---|---|---|---|---|---|---|---|---|---|---|---|
| | ② | ③ | ⑥ | ⑦ | ⑩ | ⑪ | ② | ③ | ④ | ⑥ | ⑦ | ⑧ | ②㉗ | ③㉖ | ④㉕ | ⑥㉓ | ⑧㉑ |
| TUNER | 0 | 0 | 0 | 0 | 1 | 1 | 0 | 0 | 0 | 0 | 0 | 0 | 1 | 0 | 0 | 0 | 0 |
| PHONO | 0 | 0 | 0 | 0 | 1 | 1 | 0 | 0 | 0 | 0 | 0 | 0 | 0 | 1 | 0 | 0 | 0 |
| CD | 0 | 0 | 0 | 0 | 1 | 1 | 0 | 0 | 0 | 0 | 0 | 0 | 0 | 0 | 1 | 0 | 0 |
| TAPE1 | 0 | 0 | 0 | 0 | 1 | 1 | 0 | 0 | 0 | 0 | 0 | 0 | 0 | 0 | 0 | 1 | 0 |
| VIDEO1 | 1 | 0 | 1 | 0 | 1 | 1 | 0 | 0 | 0 | 0 | 0 | 0 | 0 | 0 | 0 | 0 | 0 |
| VIDEO2 | 0 | 1 | 0 | 1 | 1 | 1 | 0 | 0 | 0 | 0 | 0 | 0 | 0 | 0 | 0 | 0 | 0 |
| VIDEO3 | 0 | 0 | 0 | 0 | 1 | 1 | 1 | 0 | 0 | 1 | 0 | 0 | 0 | 0 | 0 | 0 | 0 |
| VIDEO4 | 0 | 0 | 0 | 0 | 1 | 1 | 0 | 1 | 0 | 0 | 1 | 0 | 0 | 0 | 0 | 0 | 0 |
| AV AUX | 0 | 0 | 0 | 0 | 1 | 1 | 0 | 0 | 1 | 0 | 0 | 1 | 0 | 0 | 0 | 0 | 0 |

(3) Picture system selector ROOM A (0 : L / 1 : H)

| | (X13)IC7 | | | | |
|---|---|---|---|---|---|
| | ⑭ | ⑮ | ⑯ | ⑰ | ① |
| VIDEO1 | 0 | 0 | 0 | 0 | 0 |
| VIDEO2 | 1 | 0 | 1 | 0 | 0 |
| VIDEO3 | 1 | 1 | 1 | 1 | 1 |
| VIDEO4 | 1 | 1 | 1 | 1 | 0 |
| AV AUX | 0 | 1 | 0 | 1 | 0 |

## CIRCUIT DESCRIPTION

(4) Picture system selector ROOM B (0 : L / 1 : H)

| VIDEO OUT | (X13)IC7 | | |
|---|---|---|---|
| | ② | ③ | ④ |
| VIDEO1 | 0 | 0 | 0 |
| VIDEO2 | 1 | 0 | 0 |
| VIDEO3 | 0 | 1 | 0 |
| VIDEO4 | 0 | 0 | 1 |
| AV AUX | 1 | 1 | 0 |

(5) Relay switching (0 : RELAY OFF / 1 : RELAY ON)

| SPEAKER A | SPEAKER B | SURROUND | (X07)RELAY | | | | |
|---|---|---|---|---|---|---|---|
| | | | A(K2) | B(K3) | CS(K4) (K5) | TR(K6) | HP(K7) |
| OFF | OFF | OFF | 0 | 0 | 0 | 1 | 1 |
| ON | OFF | OFF | 1 | 0 | 0 | 1 | 0 |
| ON | OFF | ON | 1 | 0 | 1 | 1 | 0 |
| OFF | ON | OFF | 0 | 1 | 0 | 1 | 0 |
| ON | ON | OFF | 1 | 1 | 0 | 0 | 0 |

(6) OSD switching (0 : L / 1 : H)

| S_SW | OSD A/B | (X13)IC7 | | |
|---|---|---|---|---|
| | | ⑥ | ⑦ | ⑧ |
| L | A | 0 | 0 | 1 |
| L | B | 0 | 1 | 0 |
| H | A | 1 | 1 | 1 |
| H | B | 0 | 1 | 0 |

(7) Input level switching (0 : SW OFF / 1 : SW ON)

| | (X25)IC8 | |
|---|---|---|
| | ⑩ ⑲ | ⑪ ⑱ |
| INPUT LEVEL ATT 0dB | 1 | 0 |
| INPUT LEVEL ATT -3dB | 0 | 0 |
| INPUT LEVEL ATT -6dB | 0 | 1 |

(8) Digital REC switching (0 : SW OFF / 1 : SW ON)

| | (X25)IC9 | | | | |
|---|---|---|---|---|---|
| | ③ ㉖ | ⑤ ㉔ | ⑥ ㉓ | ⑧ ㉑ | ⑨ ⑳ |
| DIGITAL REC | 0 | 1 | 1 | 0 | 0 |
| Except for DIGITAL REC | 1 | 0 | 0 | 1 | 1 |



KR-V999D/1090VR

## ADJUSTMENT

| No. | ITEM | INPUT SETTINGS | OUTPUT SETTINGS | TUNER SETTINGS | ALIGNMENT POINTS | ALIGN FOR | FIG. |
|---|---|---|---|---|---|---|---|
| FM SECTION (E,T type) | | SELECTOR : FM | | | | | |
| 1 | DISCRIMINATOR L31 ←→ L32 (E,T,Q only) | (A) 98.0MHz 1kHz,±40kHz dev. 60dBμ(ANT input) | Connect a DC voltmeter between TP3 of CN2 (X05-) | AUTO 98.0MHz | L31 (X05-) | 0V | (a) |
| | | | | | L32 (X05-) | Minimum distortion | |
| 2 | DISTORTION (STEREO) | (C) 98.0MHz 1kHz, ±40kHz dev. Pilot: ±6kHz dev. 60dBμ(ANT input) | (B) | AUTO 98.0MHz | IFT (W02-) | Minimum distortion | (a) |
| AUDIO SECTION | | SPEAKER : A | PREOUT : OFF | | PROLOGIC : ON | | |
| <1> | IDLE CURRENT | — | Connect a DC voltmeter across CP1 or CN15(L) CN16(R) CN9(CENTER) CN20(SR) or CN17(SL) (X07-) | Volume:0 | VR1(L) VR2(R) VR3(SL) VR4(SR) VR5(CENTER) (X07-) | 13mV | |
| <2> | ON SCREEN Color burst frequency | After take a single PCB, conner supply between TP(+5V) and GND (x25-)(B/2) | Connect a frequency counter between port 10 (check round of $\overline{\text{HSYNC}}$) of IC204(or 206) and GND (X25-)(B/2) | After power ON (stand-by), input Low $\overline{\text{CS}}$(24pin) of IC204(or 206) four time(cancel inner reset), then input Low TEST(24pin) | TC201(NTSC) TC1(X14-) TC202(PAL) (X25-) | (TC201) 3.57954MHz (TC202) 4.433619MHz | |

(a)

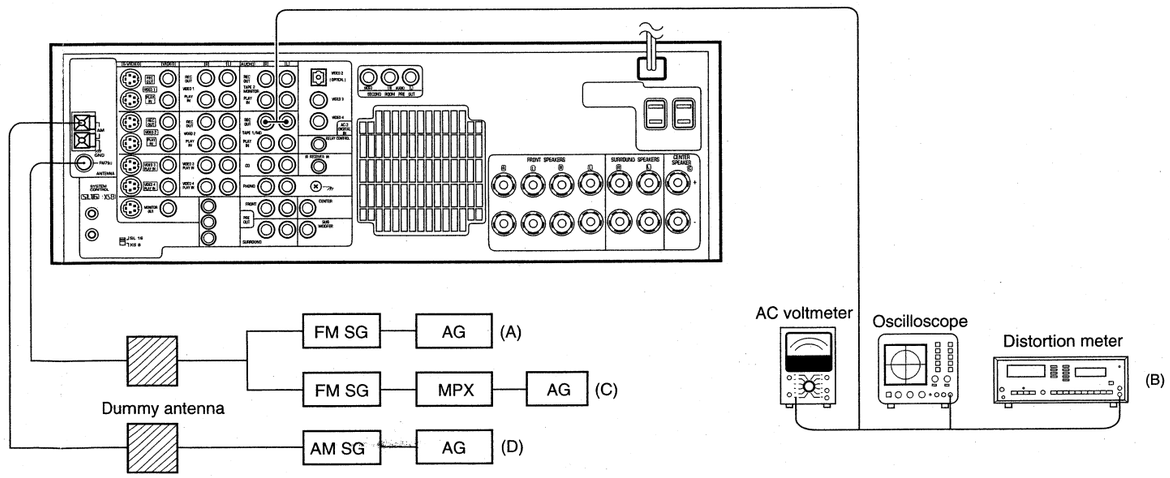

 KR-V999D/1090VR

# WIRING DIAGRAM

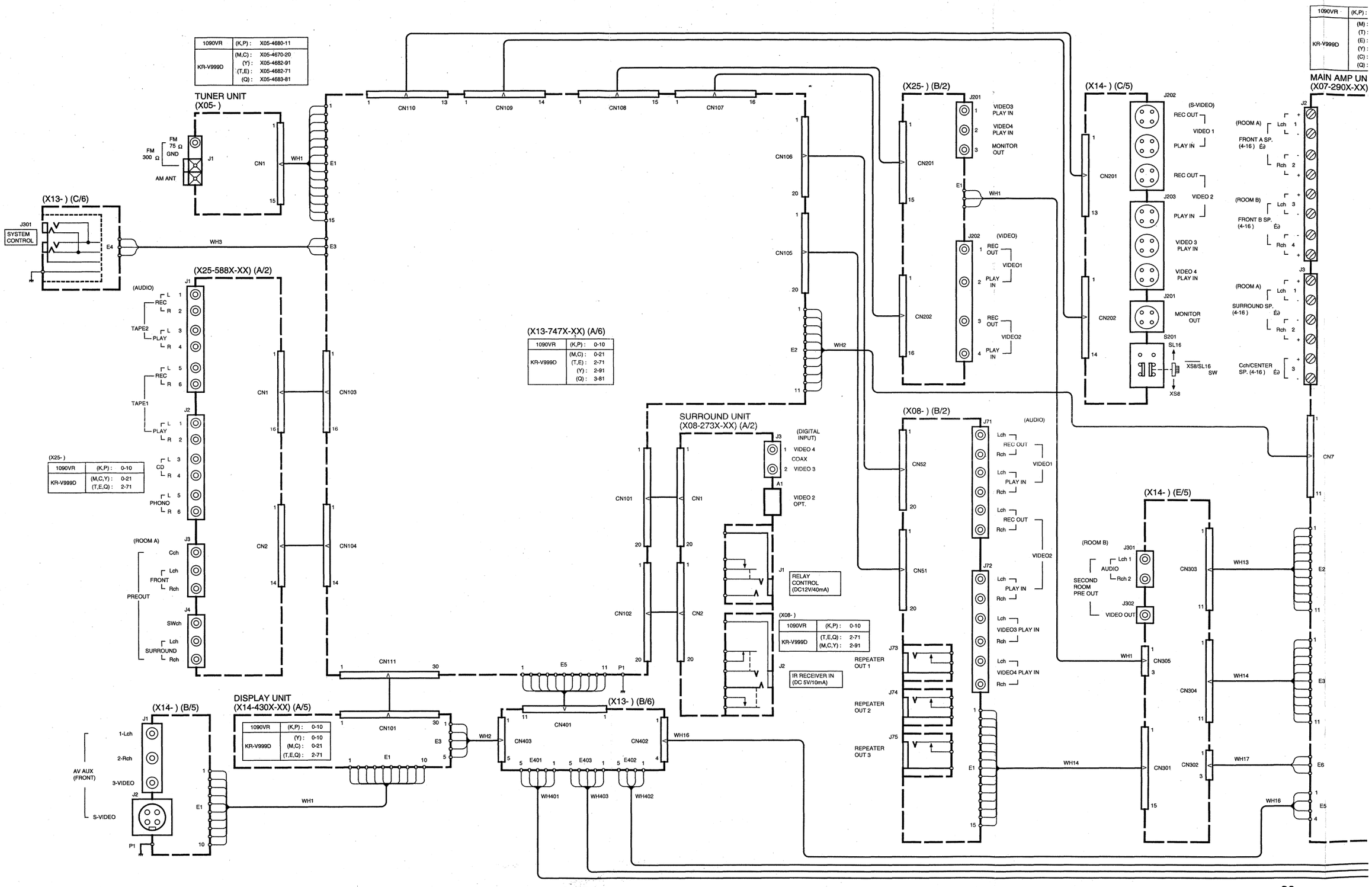

# WIRING DIAGRAM

KR-V999D/1090VR

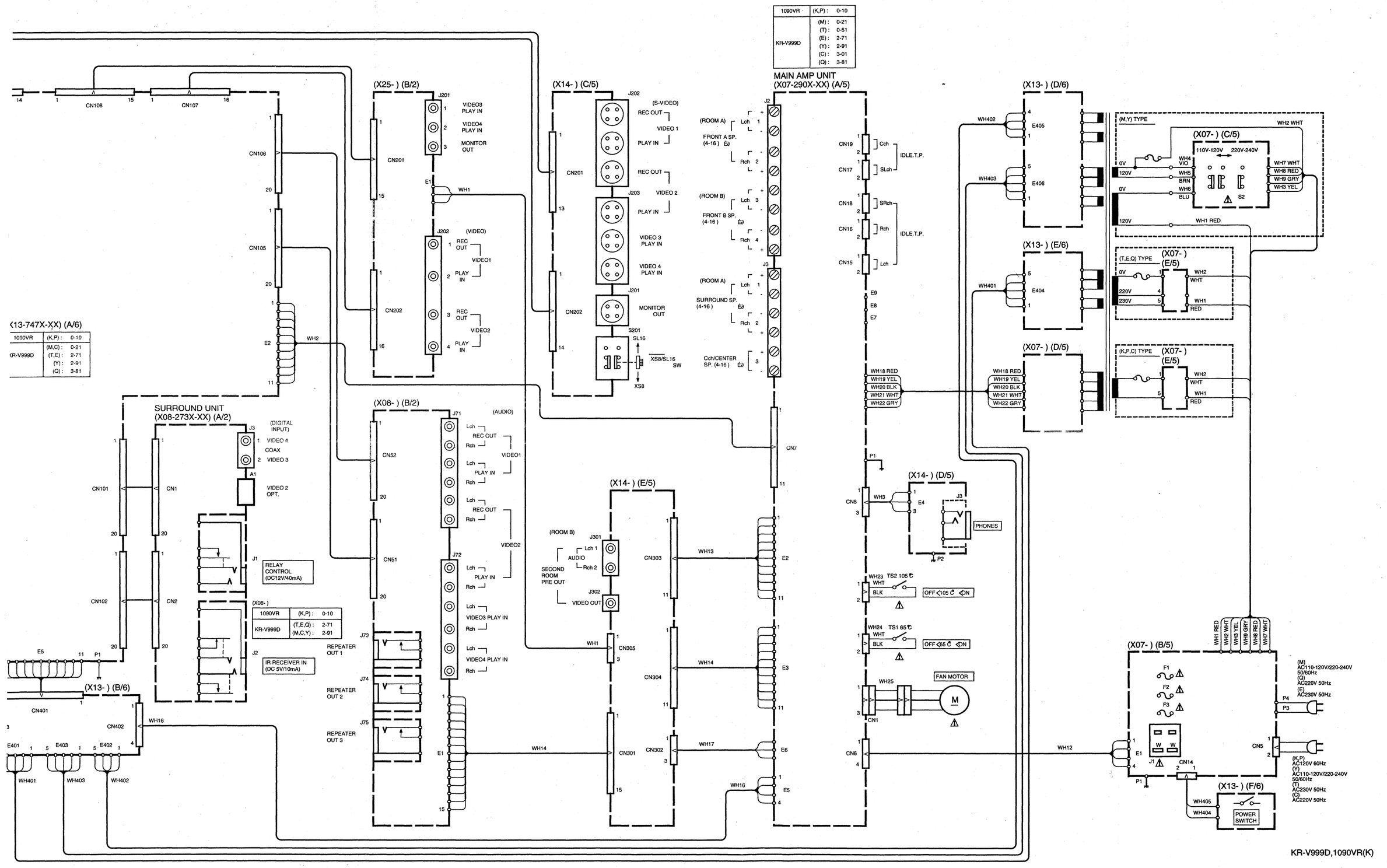


KR-V999D,1090VR(K)

# PC BOARD(Component side view)

## TUNER UNIT(X05-4670-20); CM(KR-V999D)

(X05-4670-20) J70-0959-11

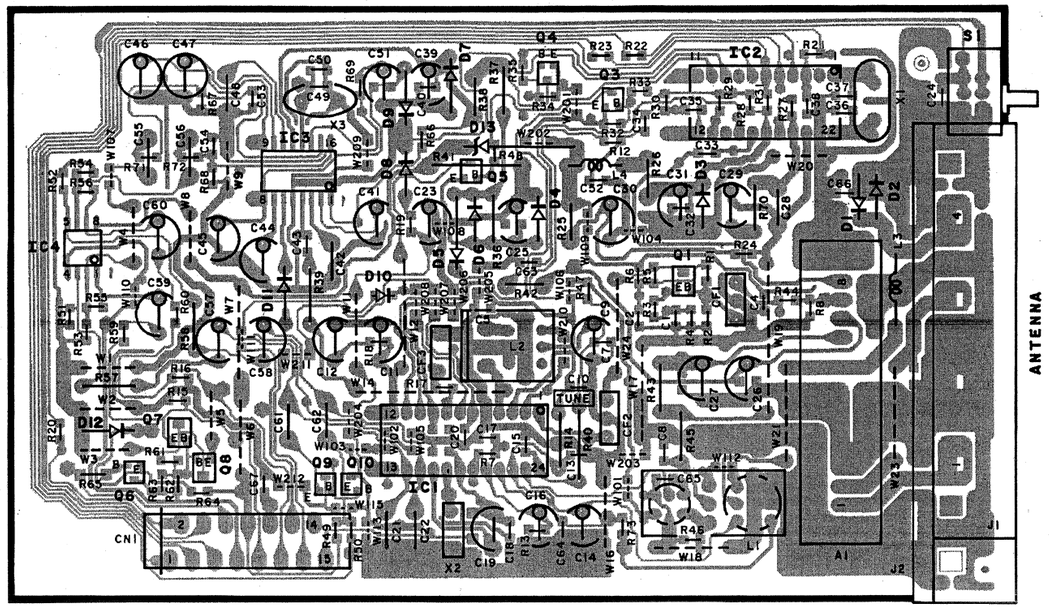


## TUNER UNIT(X05-468X-XX)

(X05-468X-XX) J70-0960-21

0-11: KP(1090VR)
2-71: TE(KR-V999D)
3-81: Q(KR-V999D)
2-91: Y(1090VR)

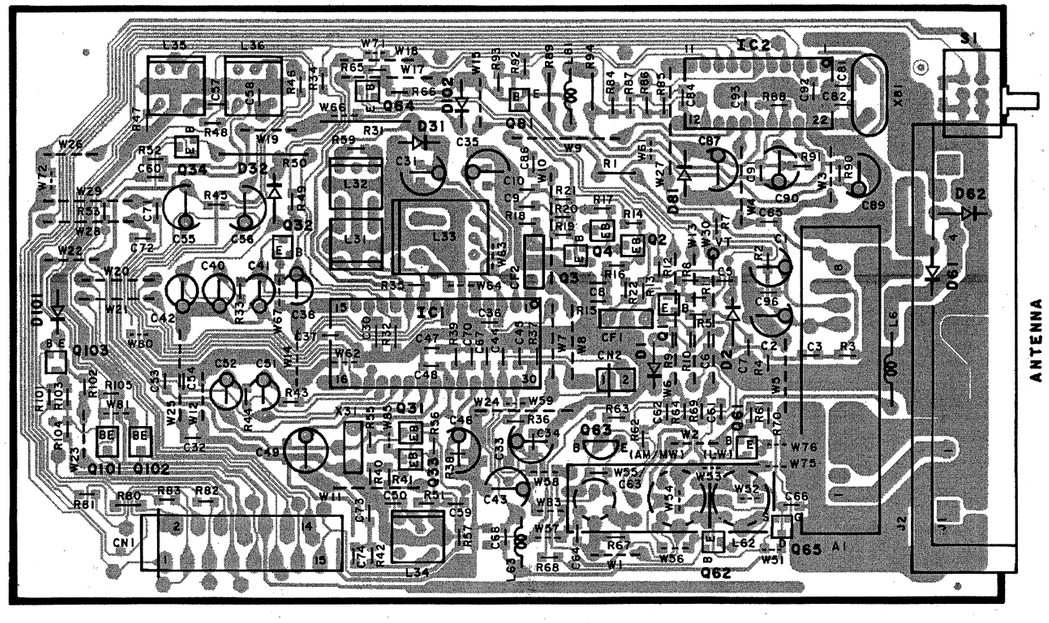




## SURROUND UNIT(X08-273X-XX)

0-10: KP(1090VR)
2-71: EQT(KR-V999D)
2-91: Y(1090VR)
CM(KR-V999D)

(X08-)(B/2)

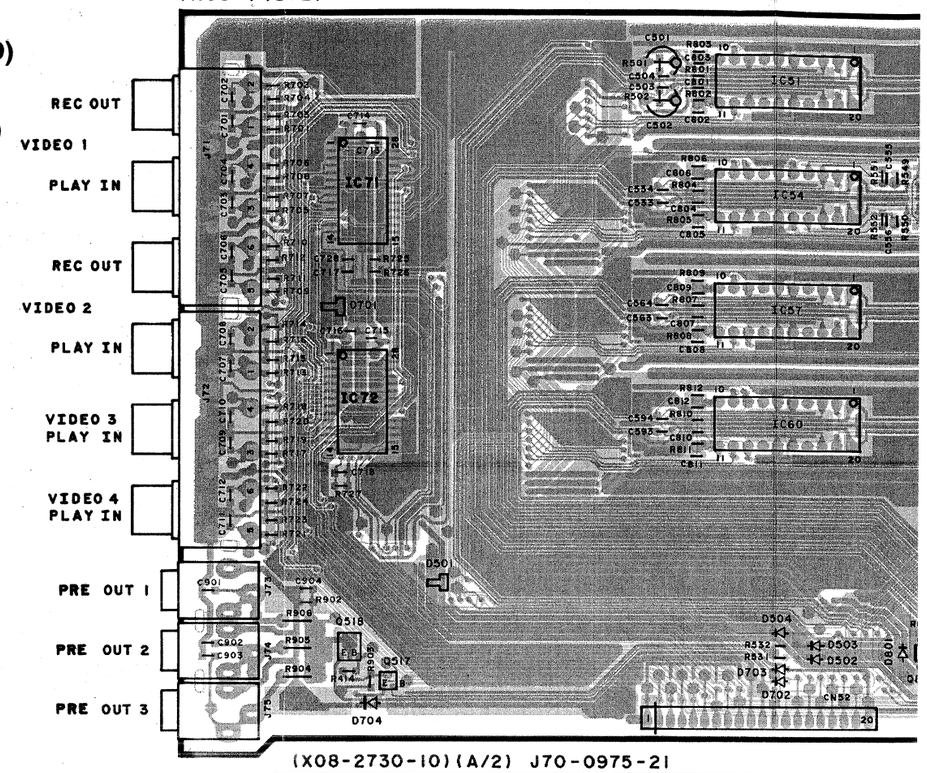




(X08-2730-10)(A/2) J70-0975-21

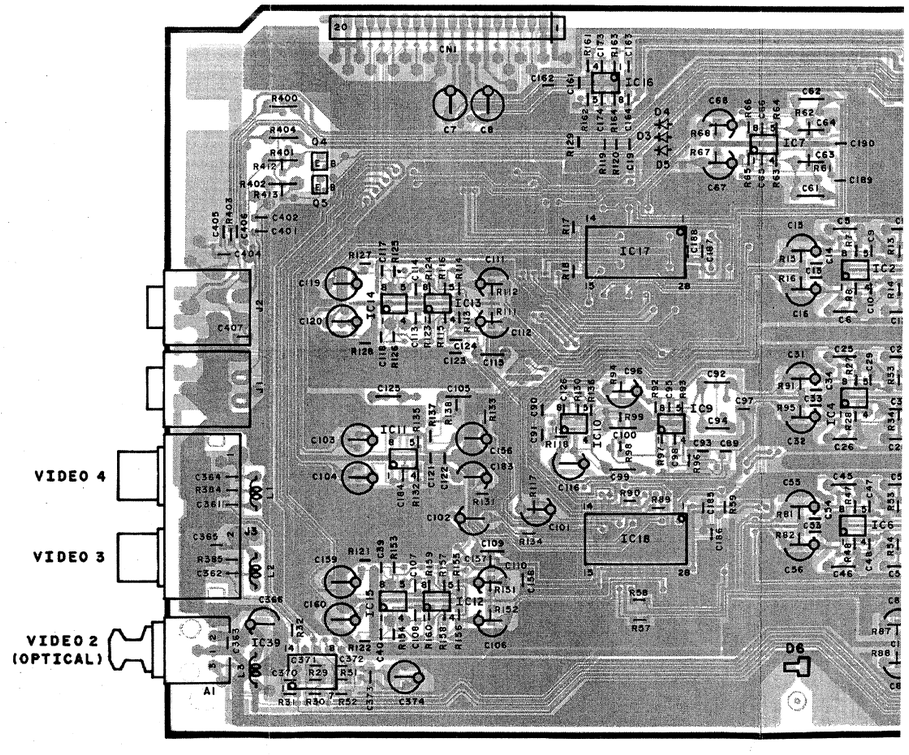

## SURROUND UNIT(X08-273X-XX)

0-10: KP(1090VR)

2-71: EQT(KR-V999D)

2-91: Y(1090VR)

CM(KR-V999D)

(X08-)(B/2)

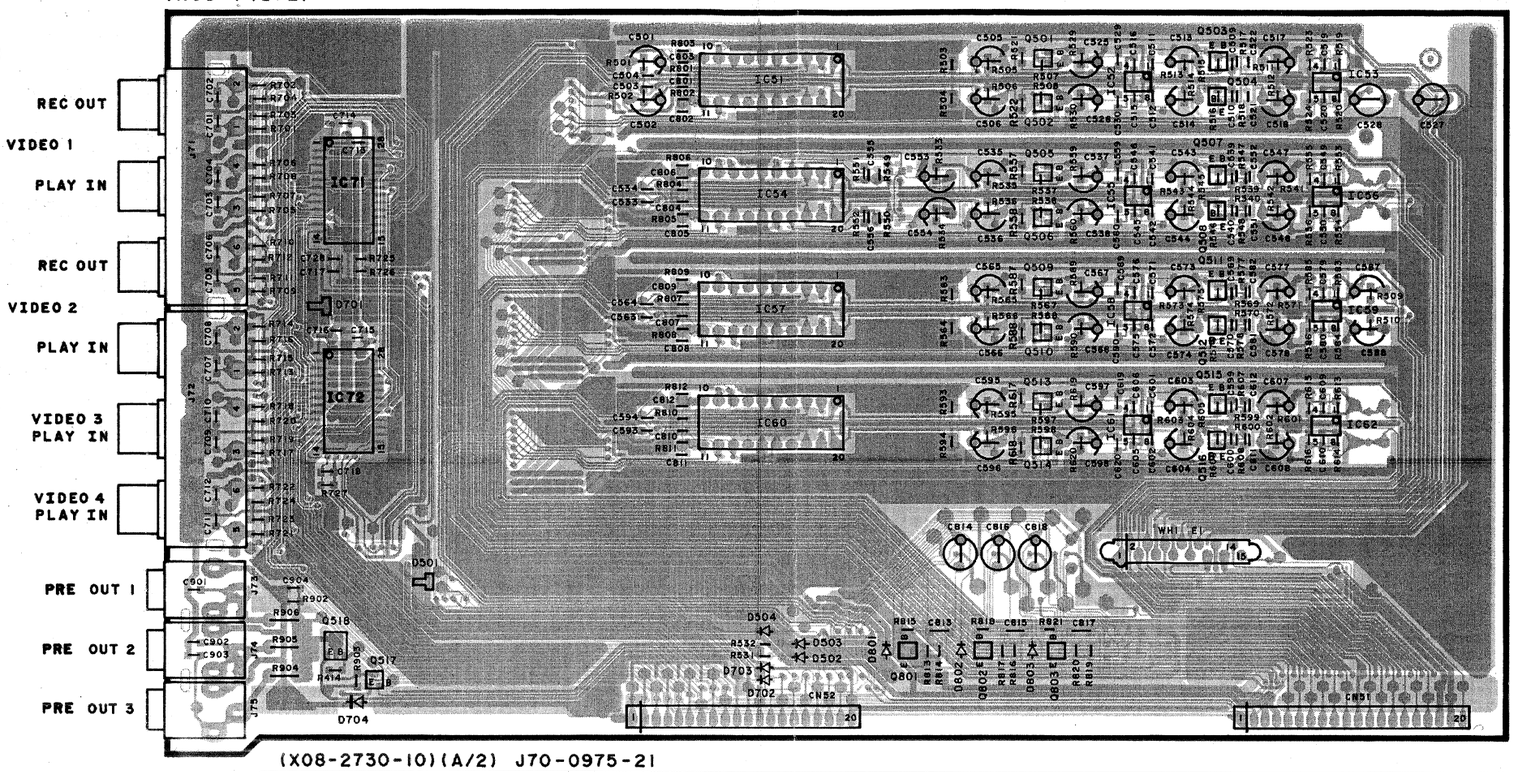


(X08-2730-10)(A/2) J70-0975-21

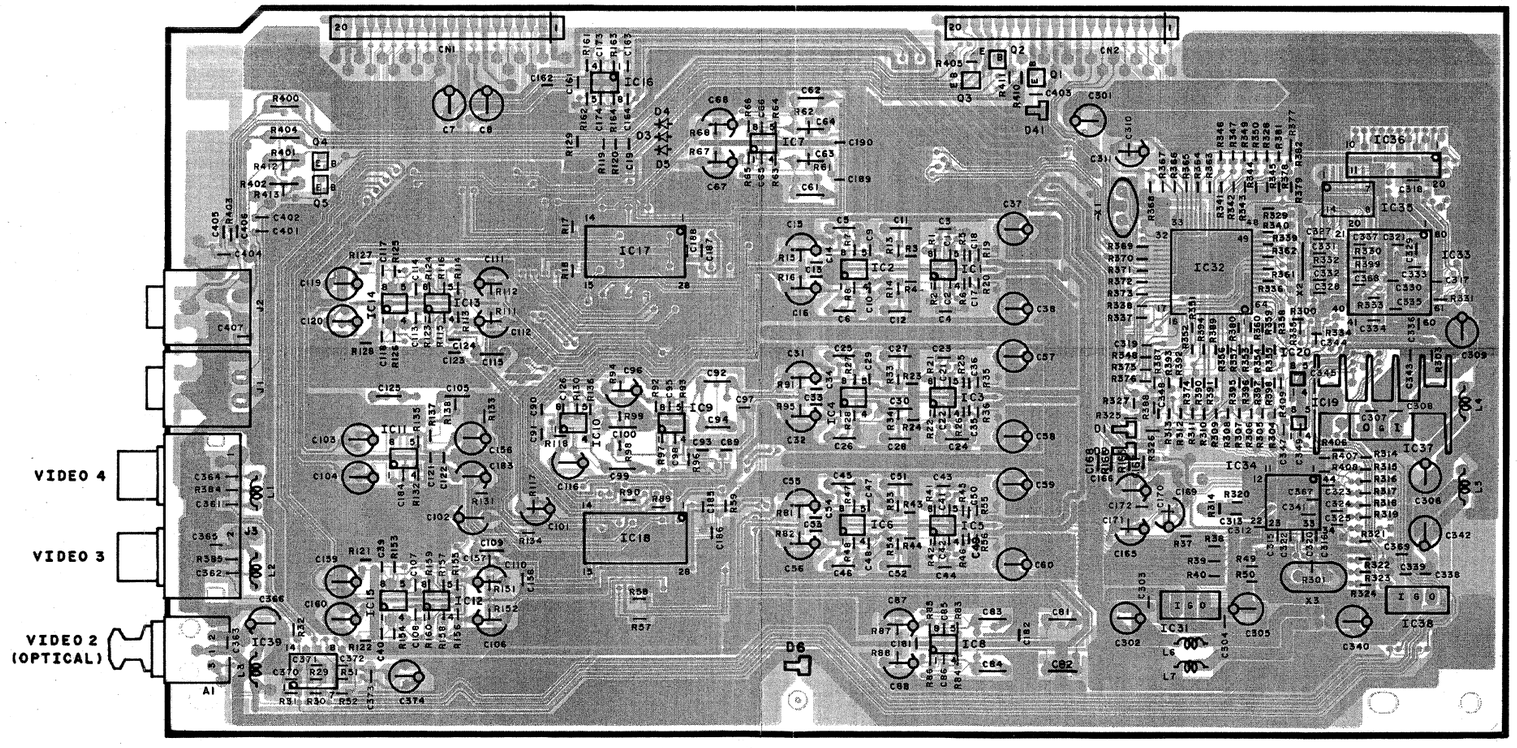






Refer to the schematic diagram for the value of resistors and capacitors.

# PC BOARD(Component side view)

## POWER AMPLIFIER UNIT(X07-290X-XX)

0-10: KP(1090VR)
0-21: M(KR-V999D)
0-51: T(KR-V999D)
2-71: E(KR-V999D)
2-91: Y(1090VR)
3-01: C(KR-V999D)
3-81: Q(KR-V999D)

X07 B/5

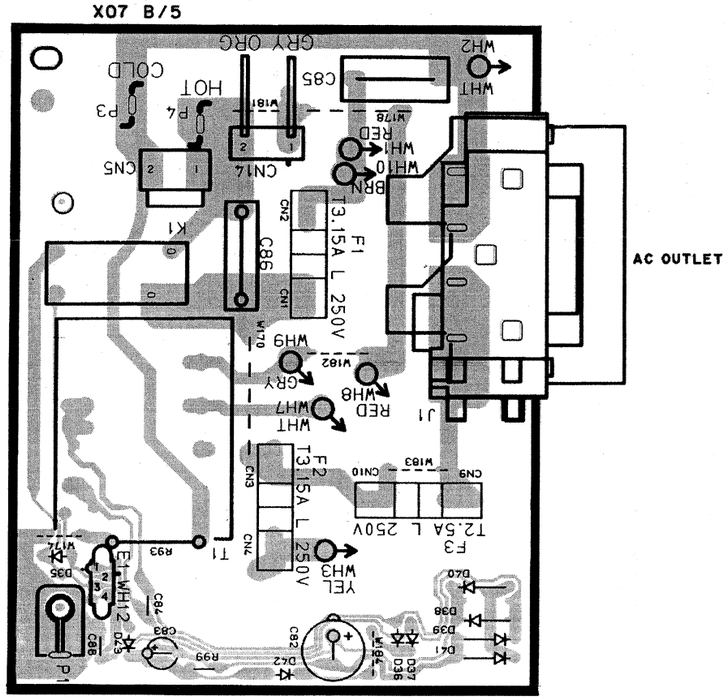


X07 B/5

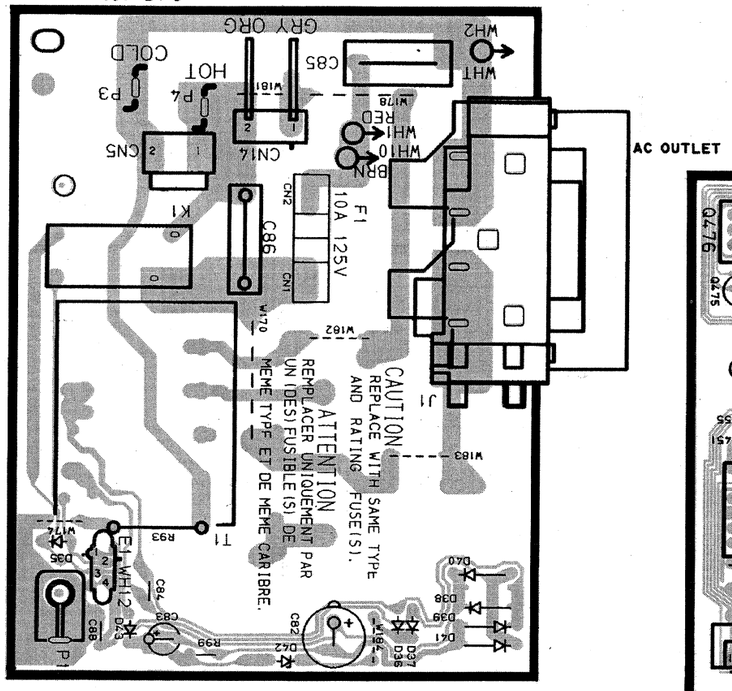


## DISPLAY UNIT (X14-430X-XX)

0-10: KPY(only 1090VR)
2-71: EQT(KR-V999D)
0-21: CM(KR-V999D)

X14 C/5

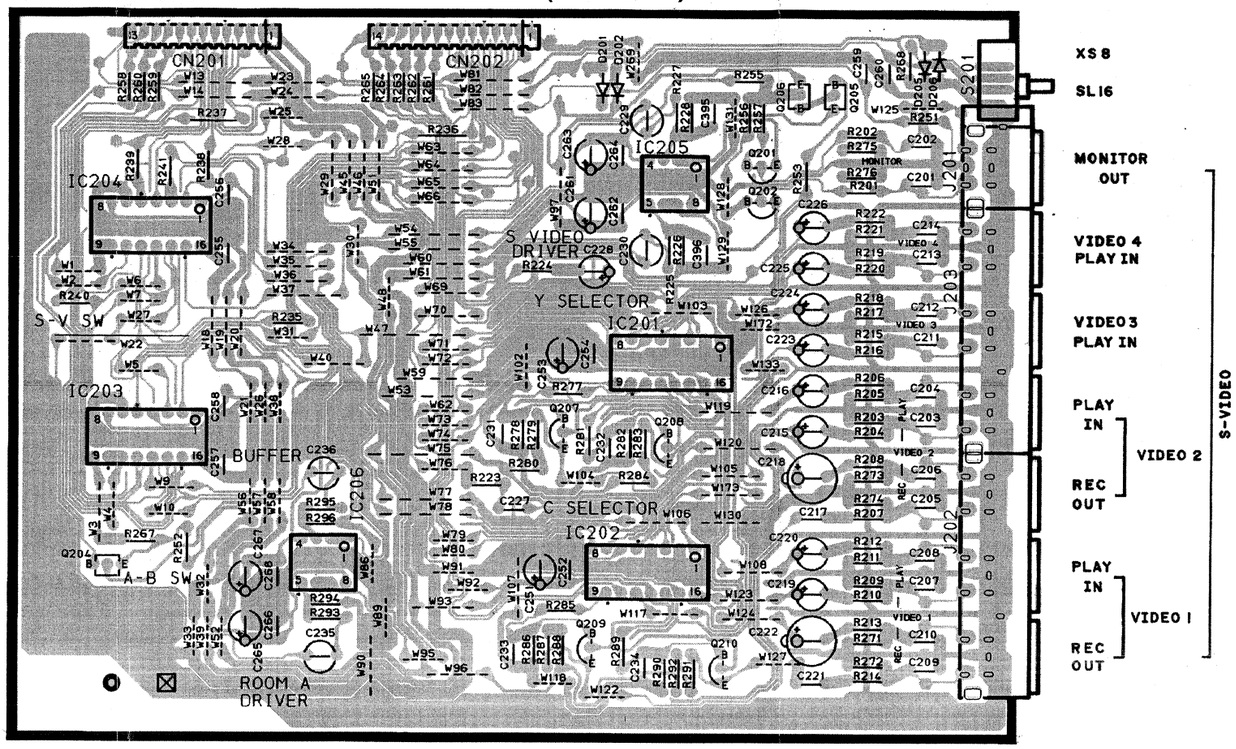


X14 E/5

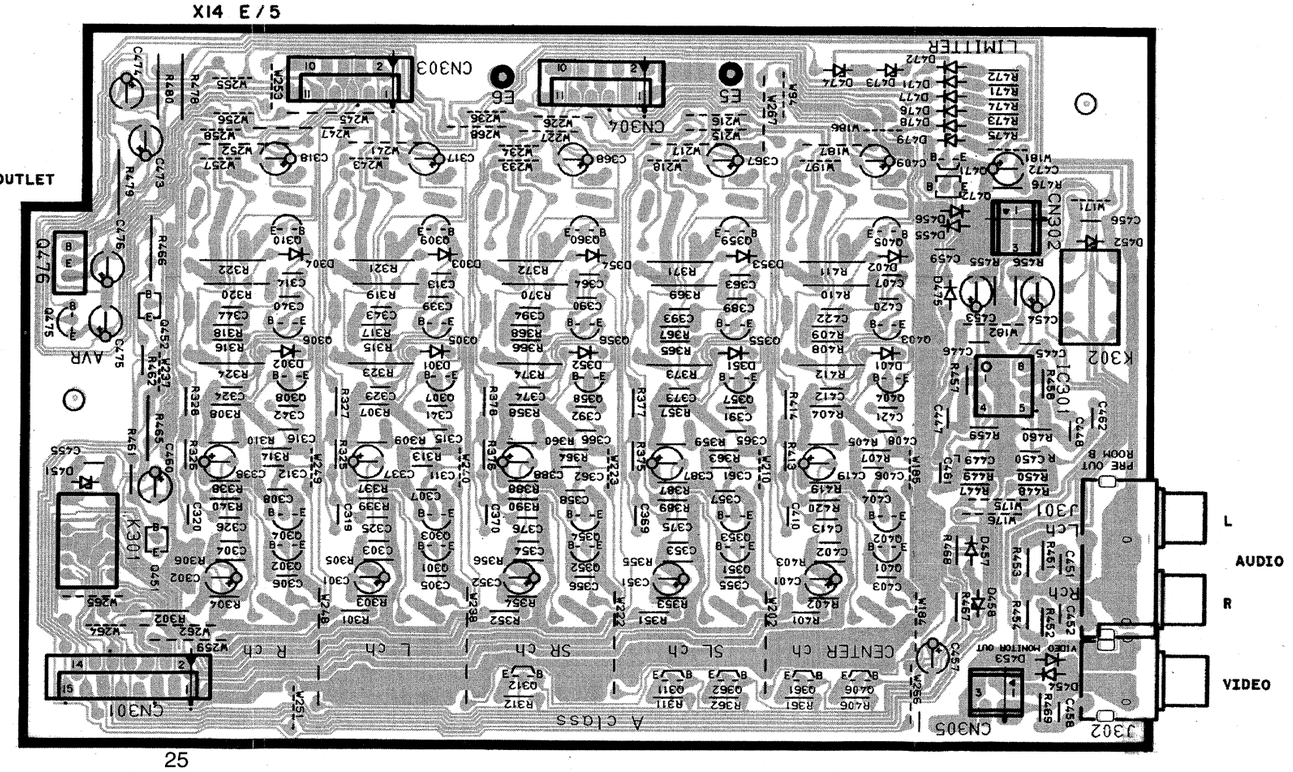


Refer to the schematic diagram for the value of resistors and capacitors.

# PC BOARD(Component side view)

**SWITCH UNIT(X25-588X-XX)**

**0-10: KP(1090VR)**

**0-21: Y(1090VR)**

**CM(KR-V999D)**

**2-71: EQT(KR-V999D)**

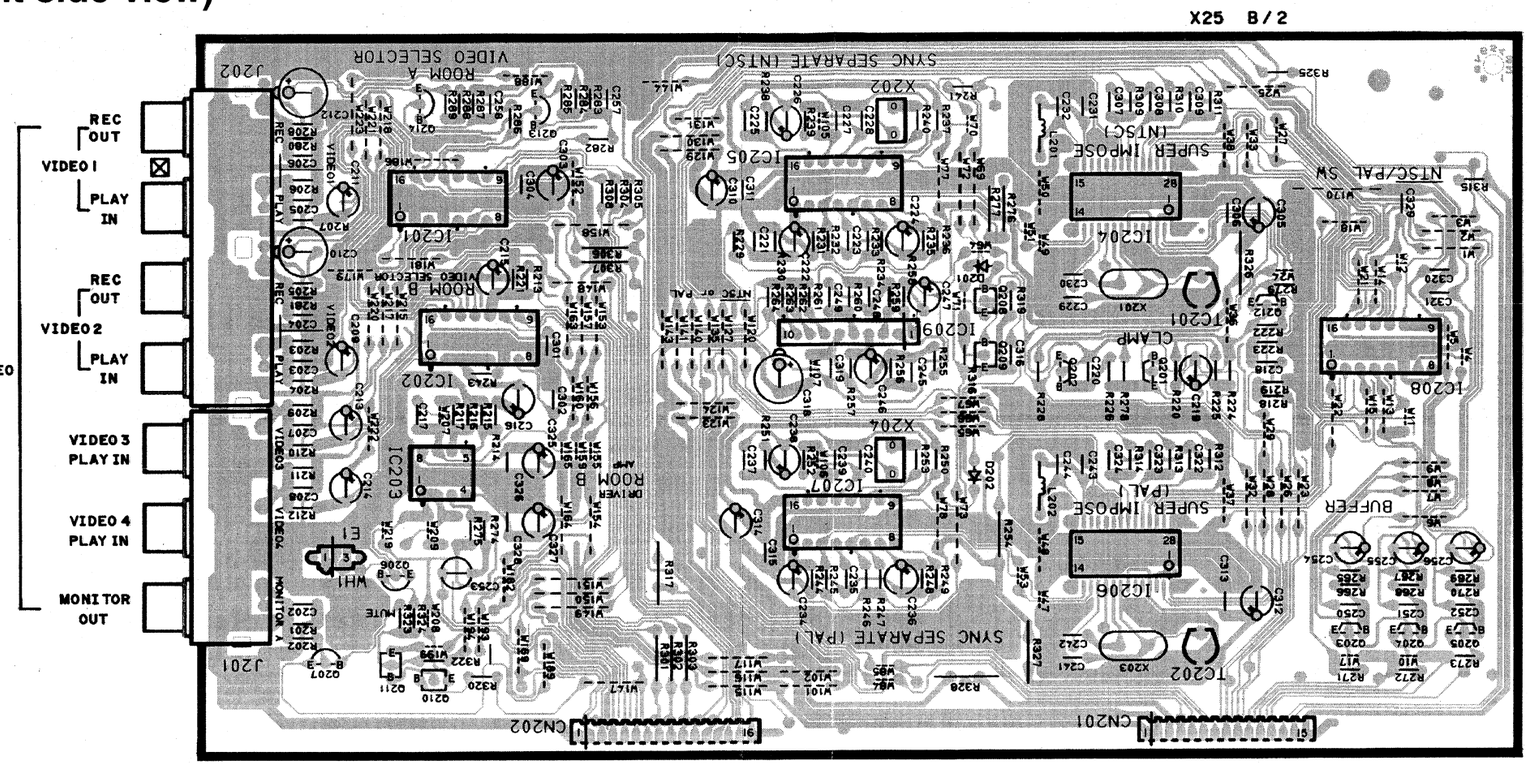


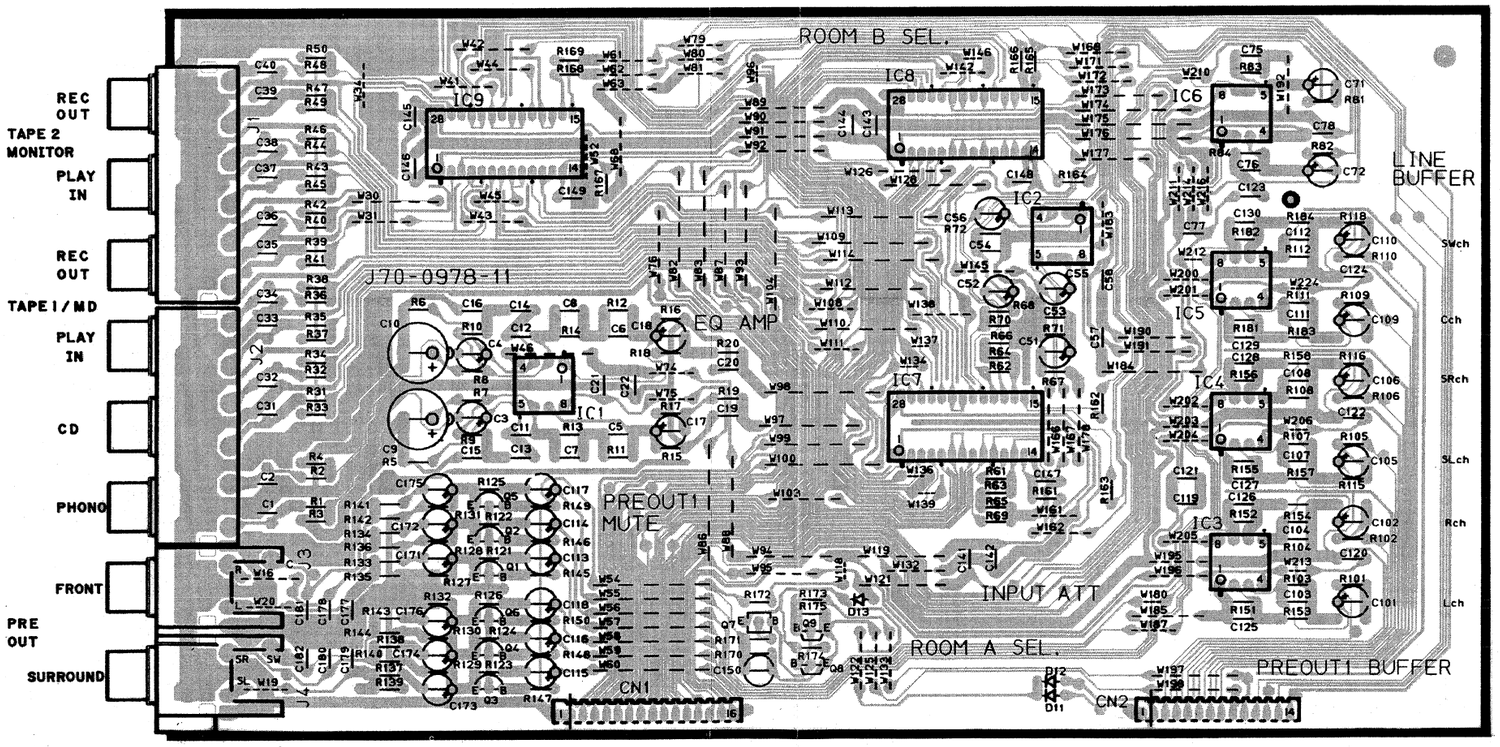


X25-588X-XX A/2





Refer to the schematic diagram for the value of resistors and capacitors.

# PC BOARD(Component side view)

**SUB CIRCUIT UNIT**
**(X13-747X-XX)**
- **0-10: KP(1090)**
- **0-21: C(KR-V999D)**
- **2-71: ET(KR-V999D)**
- **2-91: Y(1090VR)**
- **3-81: Q(KR-V999D)**

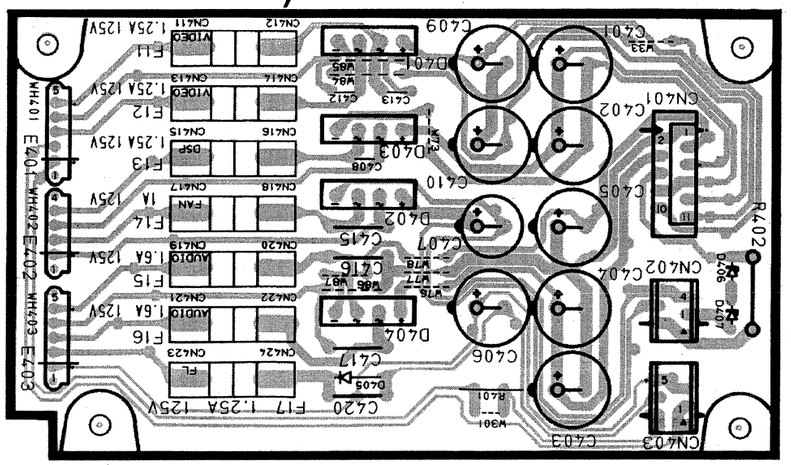

X13 B/6

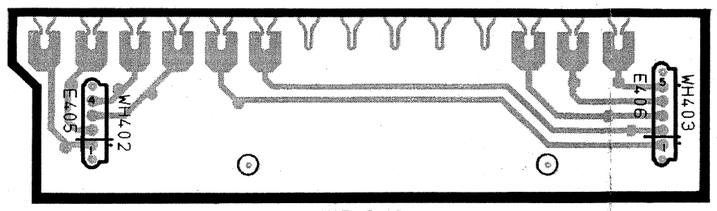

X13 D/6

X13 E/6

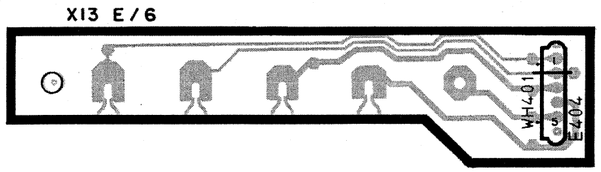

X13 F/6

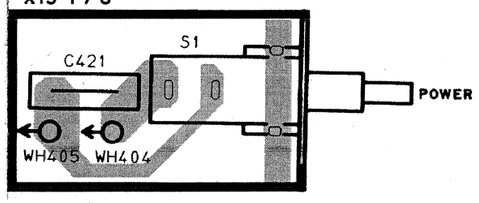


X13 C/6

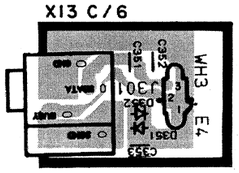


X13-747X-XX

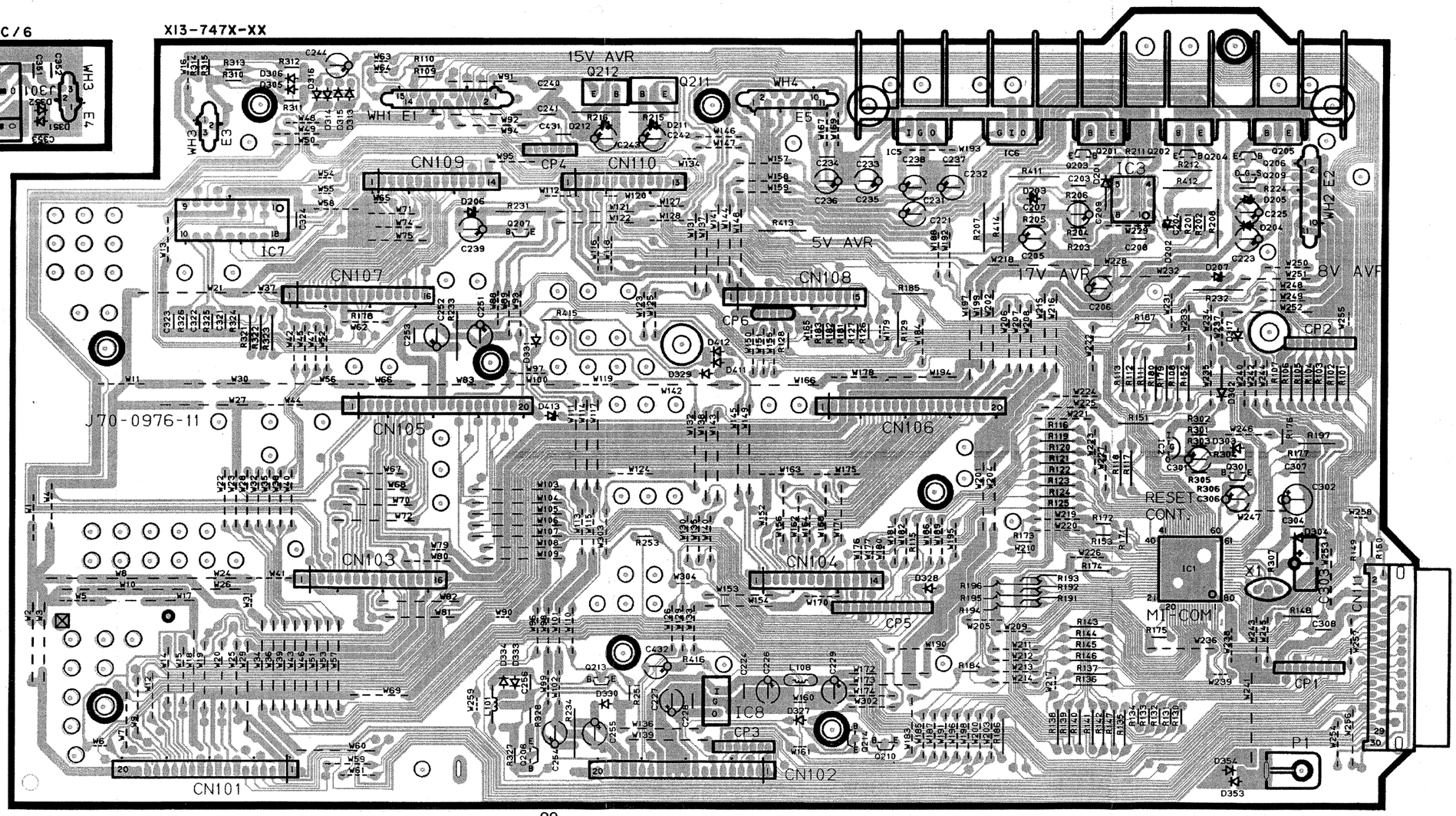


Refer to the schematic diagram for the value of resistors and capacitors.

# PC BOARD(Component side view)

**POWER AMPLIFIER UNIT**
**(X07-290X-XX)**

- **0-10: KP(1090VR)**
- **0-21: M(KR-V999D)**
- **0-51: T(KR-V999D)**
- **2-71: E(KR-V999D)**
- **2-91: Y(1090VR)**
- **3-01: C(KR-V999D)**
- **3-81: Q(KR-V999D)**

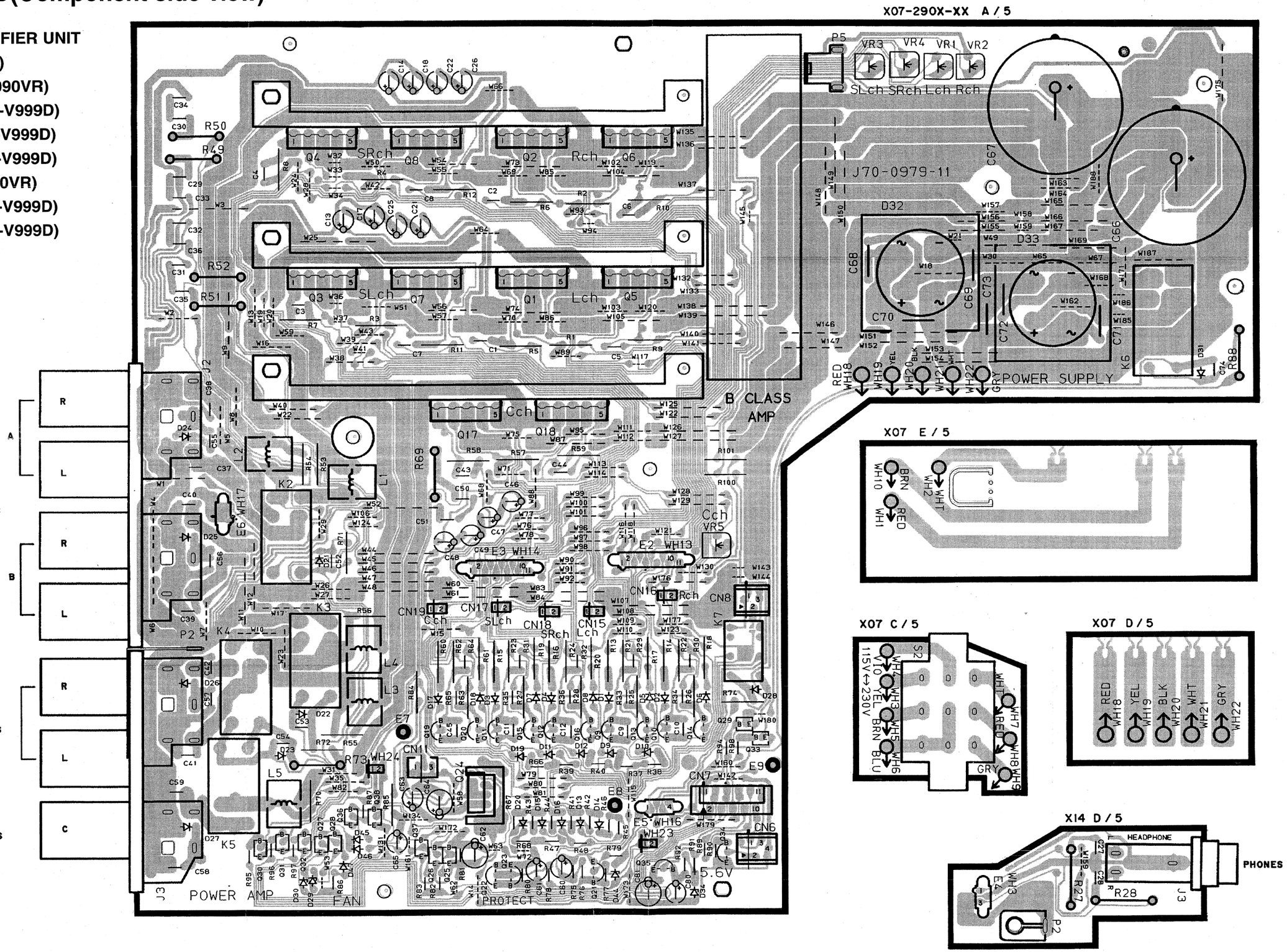


Refer to the schematic diagram for the value of resistors and capacitors.

# PC BOARD(Component side view)

**DISPLAY UNIT(X14-430X-XX)**

**0-10: KPY(only 1090VR)**

**0-21: CM(KR-V999D)**

**2-71: EQT(KR-V999D)**

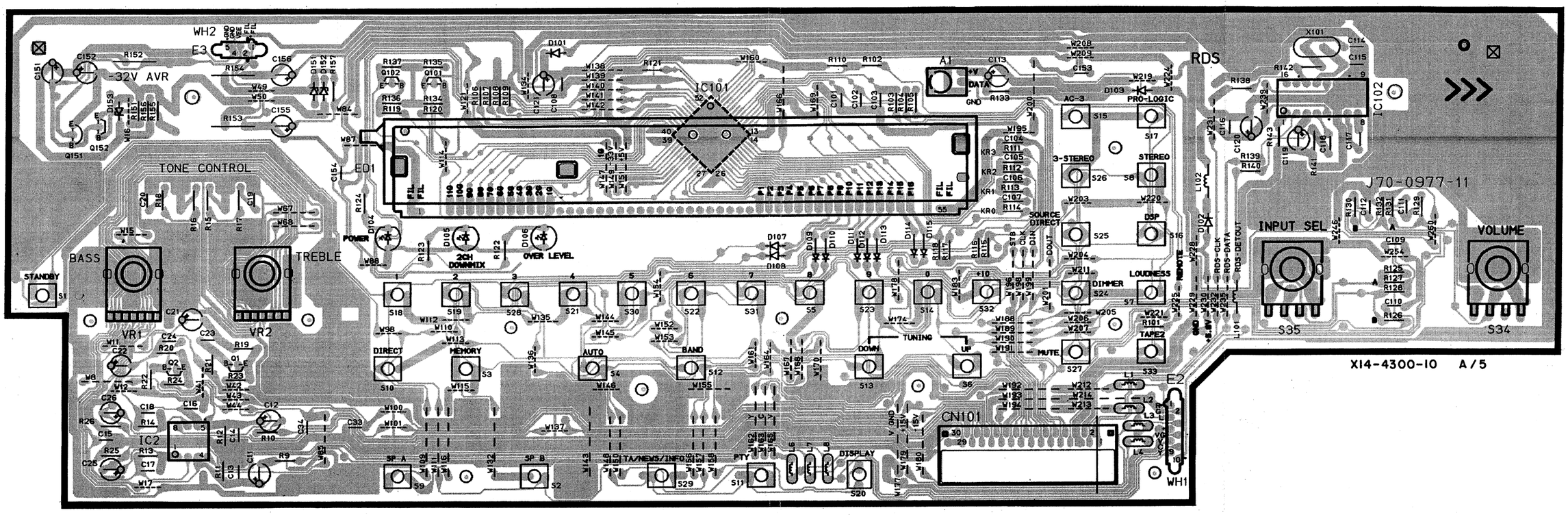


X14 B/5

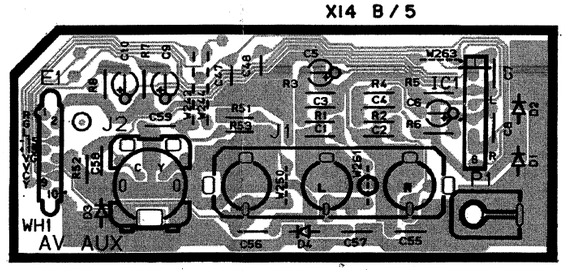


Refer to the schematic diagram for the value of resistors and capacitors.

(X05-4670-20) (C,M) TYPE

***CAUTION:*** *For continued safety, replace safety critical components only with manufacturer's recommended parts (refer to parts list). ⚠ indicates safety critical components. For continued protection against risk of fire, replace only with same type and rating fuse(s). To reduce the risk of electric shock, leakage-current or resistance measurements shall be carried out (exposed parts are acceptably insulated from the supply circuit) before the appliance is returned to the customer.*

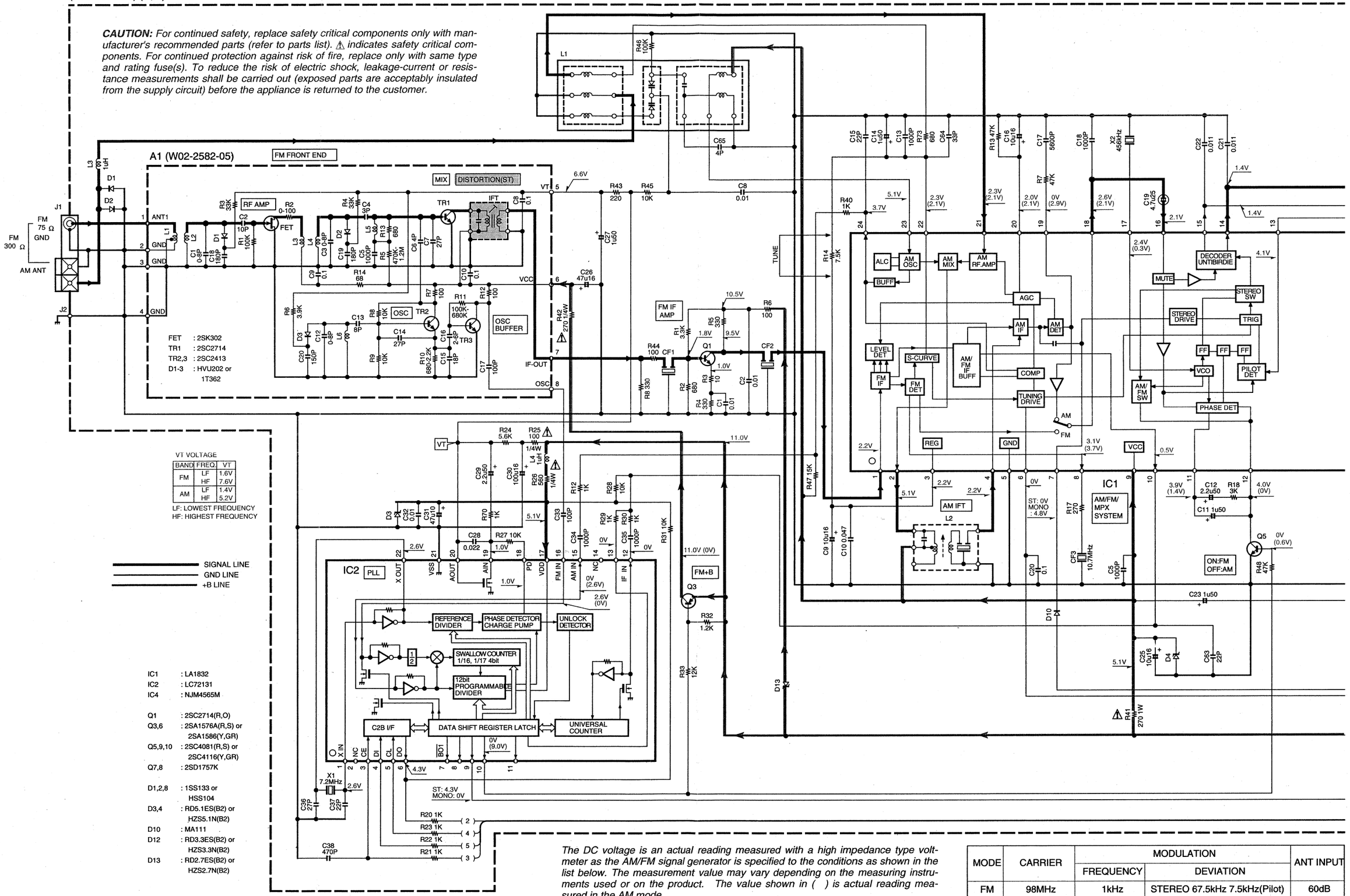


*The DC voltage is an actual reading measured with a high impedance type voltmeter as the AM/FM signal generator is specified to the conditions as shown in the list below. The measurement value may vary depending on the measuring instruments used or on the product. The value shown in ( ) is actual reading measured in the AM mode.*

| MODE | CARRIER | MODULATION | | ANT INPUT |
|---|---|---|---|---|
| | | FREQUENCY | DEVIATION | |
| FM | 98MHz | 1kHz | STEREO 67.5kHz 7.5kHz(Pilot) | 60dB |
| AM | 1000(999)kHz | 400Hz | MONO 30% MOD | 60dB |

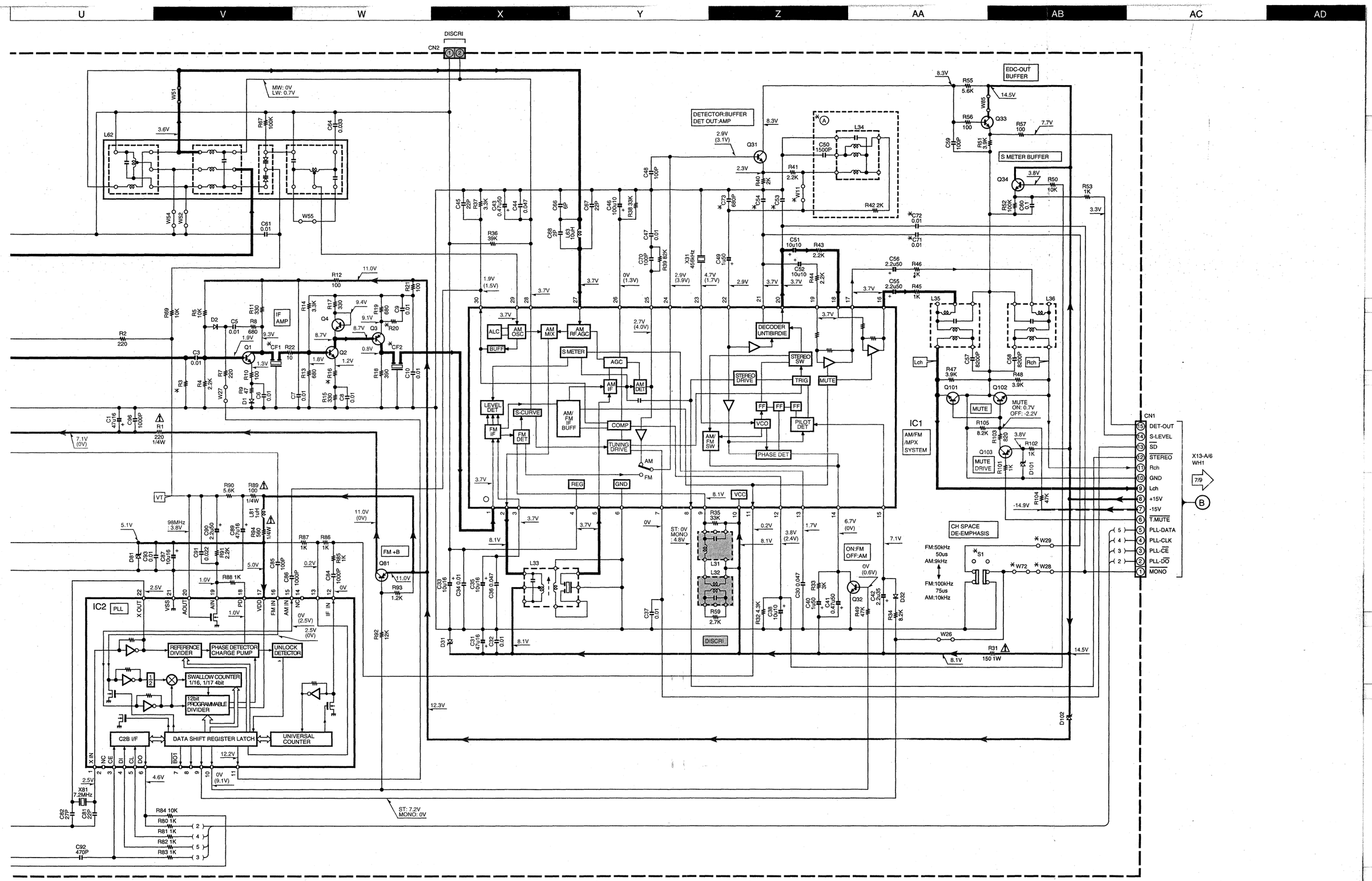


KR-V999D,1090VR(K) (2/9)

# KR-V999D/1090VR

Y05-3300-10

KENWOOD

(X08-273X-XX) (A/2)

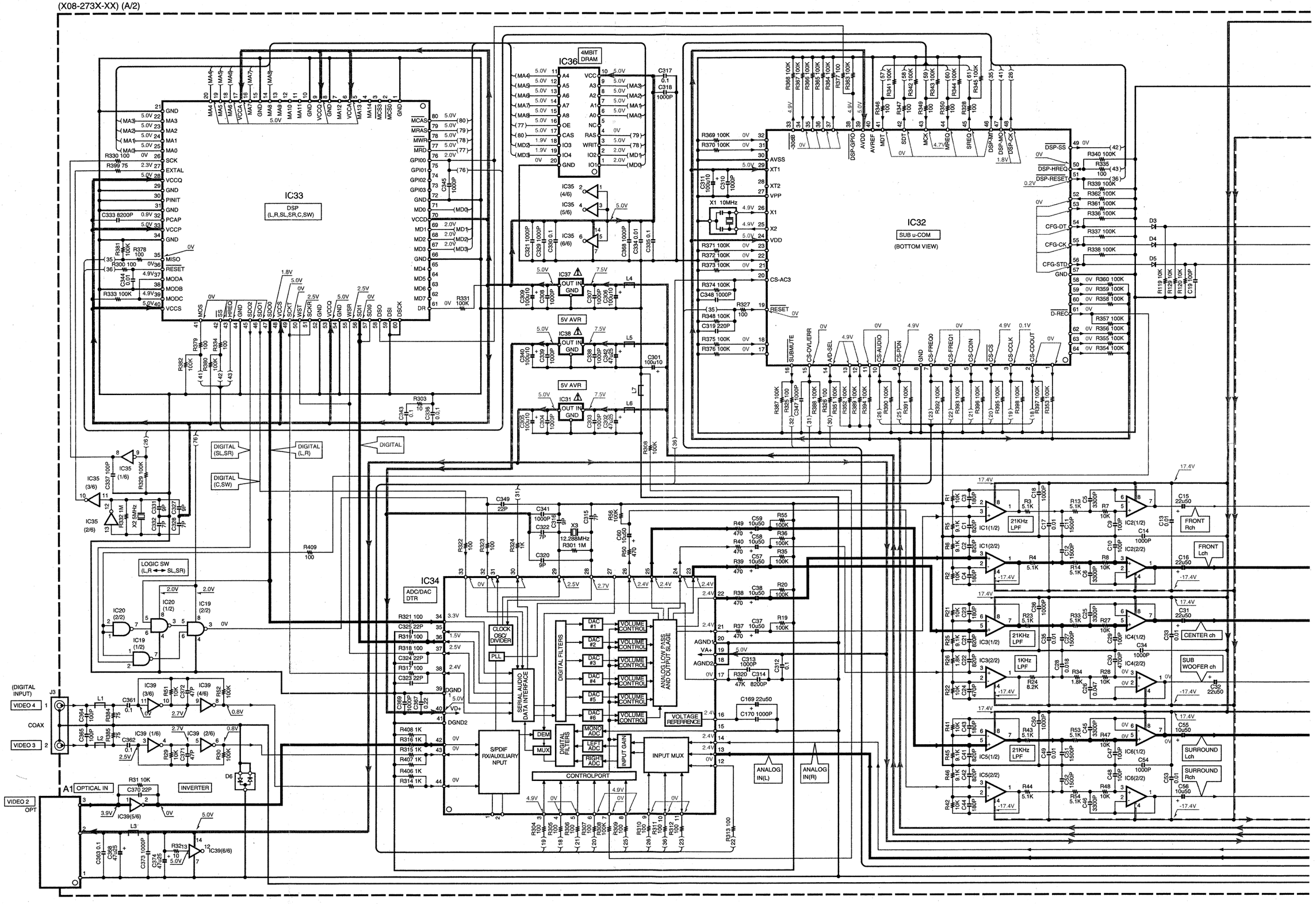

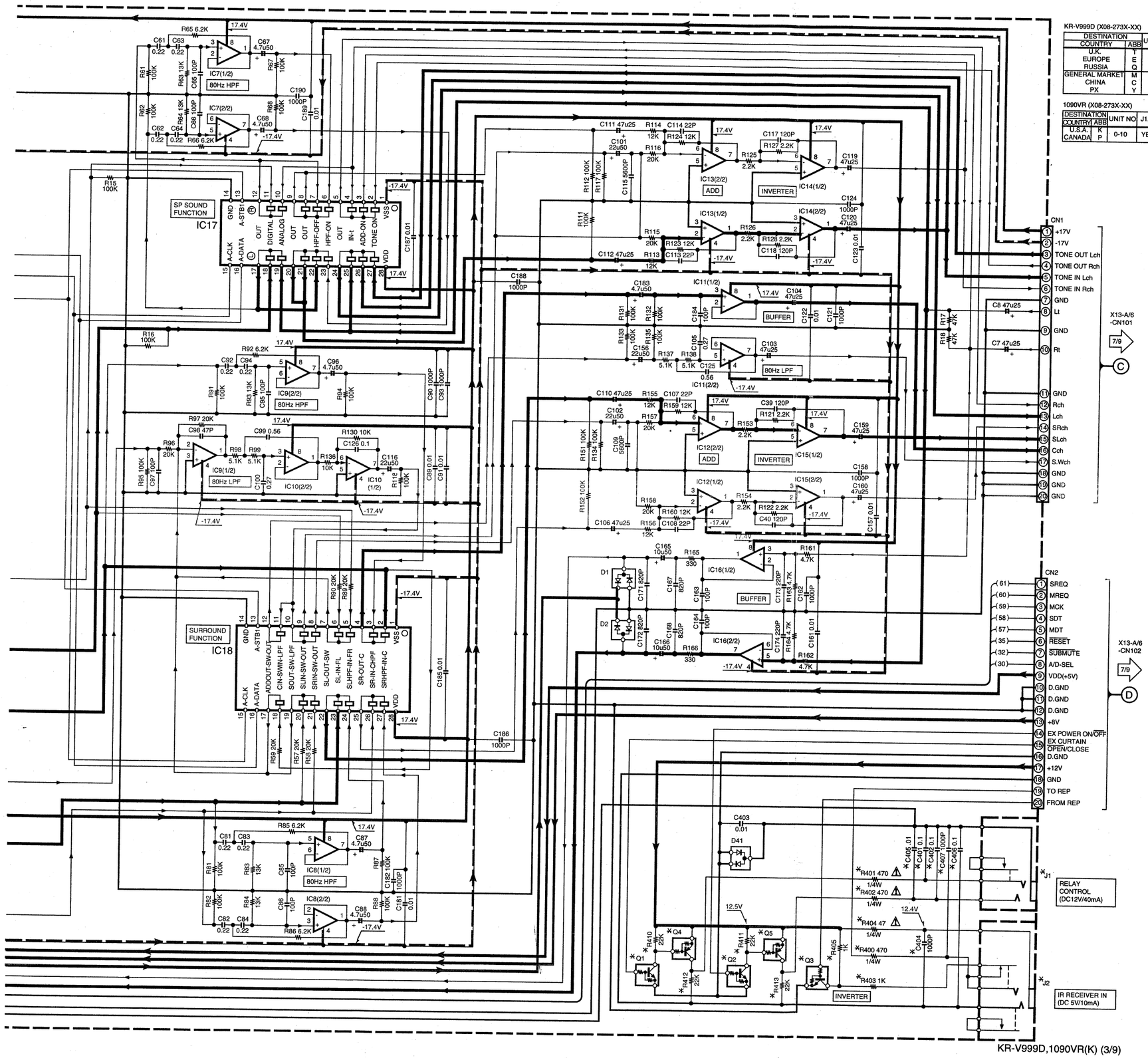


KR-V999D,1090VR(K) (3/9)

Y05-3300-10

KR-V999D (X08-273X-XX)

| DESTINATION COUNTRY | ABB | UNIT NO | J1,2 | D1-5 | C401,402,404-407 | C401,402,404-407 |
|---|---|---|---|---|---|---|
| U.K. EUROPE RUSSIA | T E Q | 2-71 | NO | NO | NO | NO |
| GENERAL MARKET CHINA PX | M C Y | 2-91 | | | | |

1090VR (X08-273X-XX)

| DESTINATION COUNTRY | ABB | UNIT NO | J1,2 | D1-5 | C401,402,404-407 | C401,402,404-407 |
|---|---|---|---|---|---|---|
| U.S.A. CANADA | K P | 0-10 | YES | YES | YES | YES |

(X08- ) (A/2)

| | | |
|---|---|---|
| IC1-16 | : | NJM4580ED or NJM4580E |
| IC17 | : | TC9163AF |
| IC18 | : | TC9162AF |
| IC19,20 | : | TC7W00FU |
| IC31,37,38 | : | TA7805S or uPC7805AHF |
| IC32 | : | uPD78016FGC522 |
| IC33 | : | DSPF56009FJ81 |
| IC34 | : | CS4226-KQ |
| IC35,39 | : | TC74HCU04AF |
| IC36 | : | LH64256CK-70 |
| Q1-3 | : | UN5212 or DTC124EUA |
| Q4,5 | : | UN5112 or DTA124EUA |
| D1,2,6,41 | : | DA204K |
| D3-5 | : | MA110 |

SIGNAL LINE
GND LINE
+B LINE
-B LINE

UN5219
2SA1586
2SC2714
2SC4081
2SC4116

2SB1308

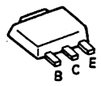

MM1067XD

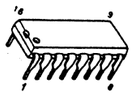

TC74HC4051AP
TC74HC4053AP

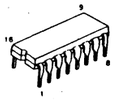

NJU3713D

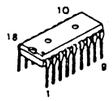

SAA6579SN
761200N

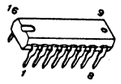

2SA1123
2SA1534A
2SA992
2SC1845
2SC2003
2SC2631

2SC28782S
C3940A2S
D863

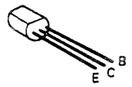

DTA113ZSA
DTA124ESA
DTC124ESA
DTC143TSA
UN4112

2SA1048
2SC2458

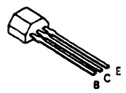

2SD2012

2SD1757K

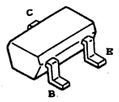

NJM4565D-
DNJM4580E

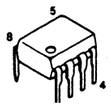

2SA1535
2SB1370
2SD2061

UN4212
UN4216
UN4219
2SA1309A

2SC3311A

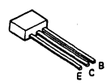

***CAUTION:*** *For continued safety, replace safety critical components only with manufacturer's recommended parts (refer to parts list).* ⚠ *indicates safety critical components. For continued protection against risk of fire, replace only with same type and rating fuse(s). To reduce the risk of electric shock, leakage-current or resistance measurements shall be carried out (exposed parts are acceptably insulated from the supply circuit) before the appliance is returned to the customer.*

*The DC voltage is an actual reading measured with a high impedance type voltmeter with no signal input. The measurement value may vary depending on the measuring instruments used or on the product.*

# KR-V999D/1090VR

KENWOOD

(X08-273X-XX) (B/2)

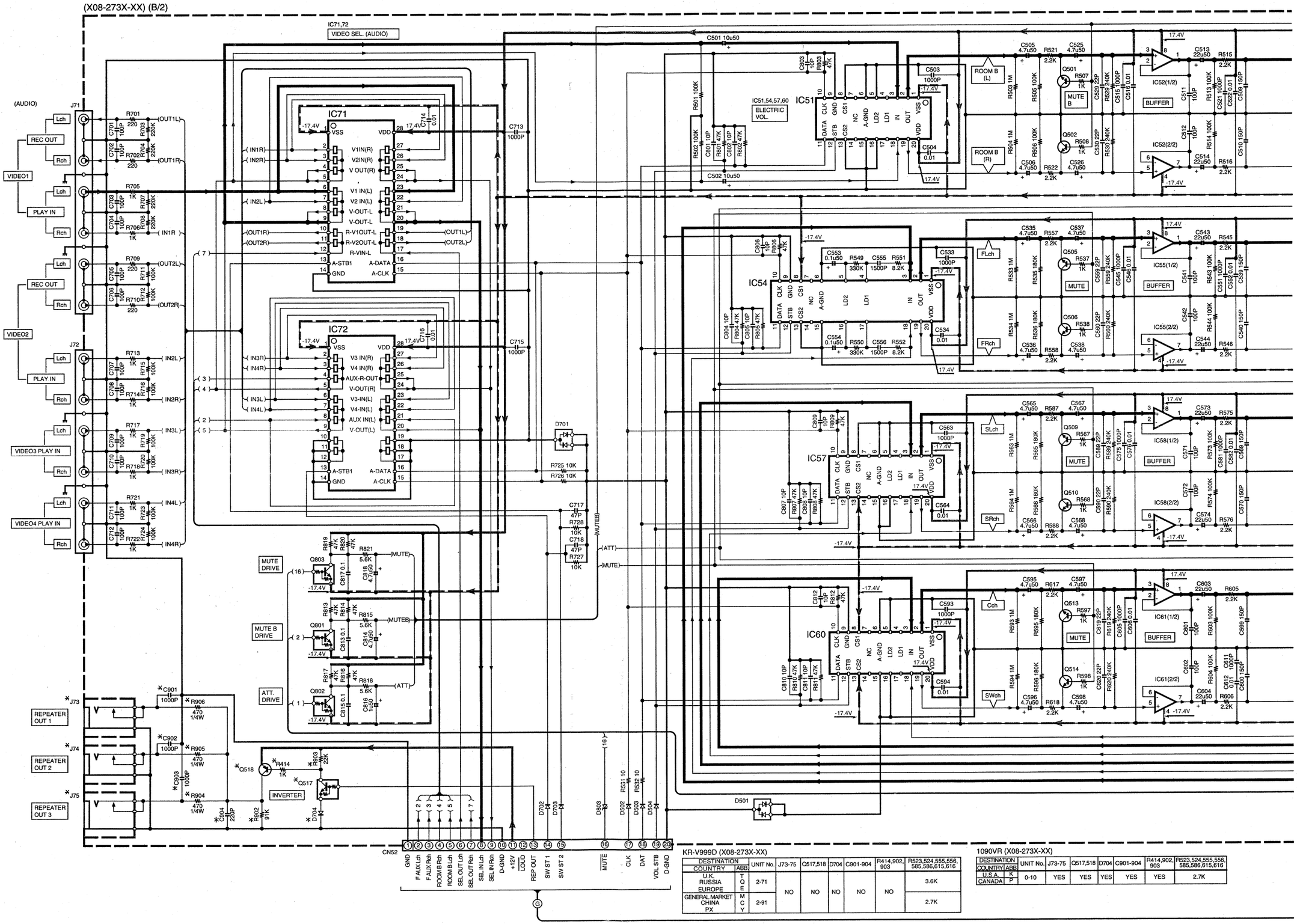


KR-V999D (X08-273X-XX)

| DESTINATION | | UNIT No. | J73-75 | Q517,518 | D704 | C901-904 | R414,902, 903 | R523,524,555,556, 585,586,615,616 |
|---|---|---|---|---|---|---|---|---|
| COUNTRY | ABB | | | | | | | |
| U.K. RUSSIA EUROPE | T Q E | 2-71 | NO | NO | NO | NO | NO | 3.6K |
| GENERAL MARKET CHINA PX | M C Y | 2-91 | | | | | | 2.7K |

1090VR (X08-273X-XX)

| DESTINATION | | UNIT No. | J73-75 | Q517,518 | D704 | C901-904 | R414,902, 903 | R523,524,555,556, 585,586,615,616 |
|---|---|---|---|---|---|---|---|---|
| COUNTRY | ABB | | | | | | | |
| U.S.A. | K | 0-10 | YES | YES | YES | YES | YES | 2.7K |
| CANADA | P | | | | | | | |

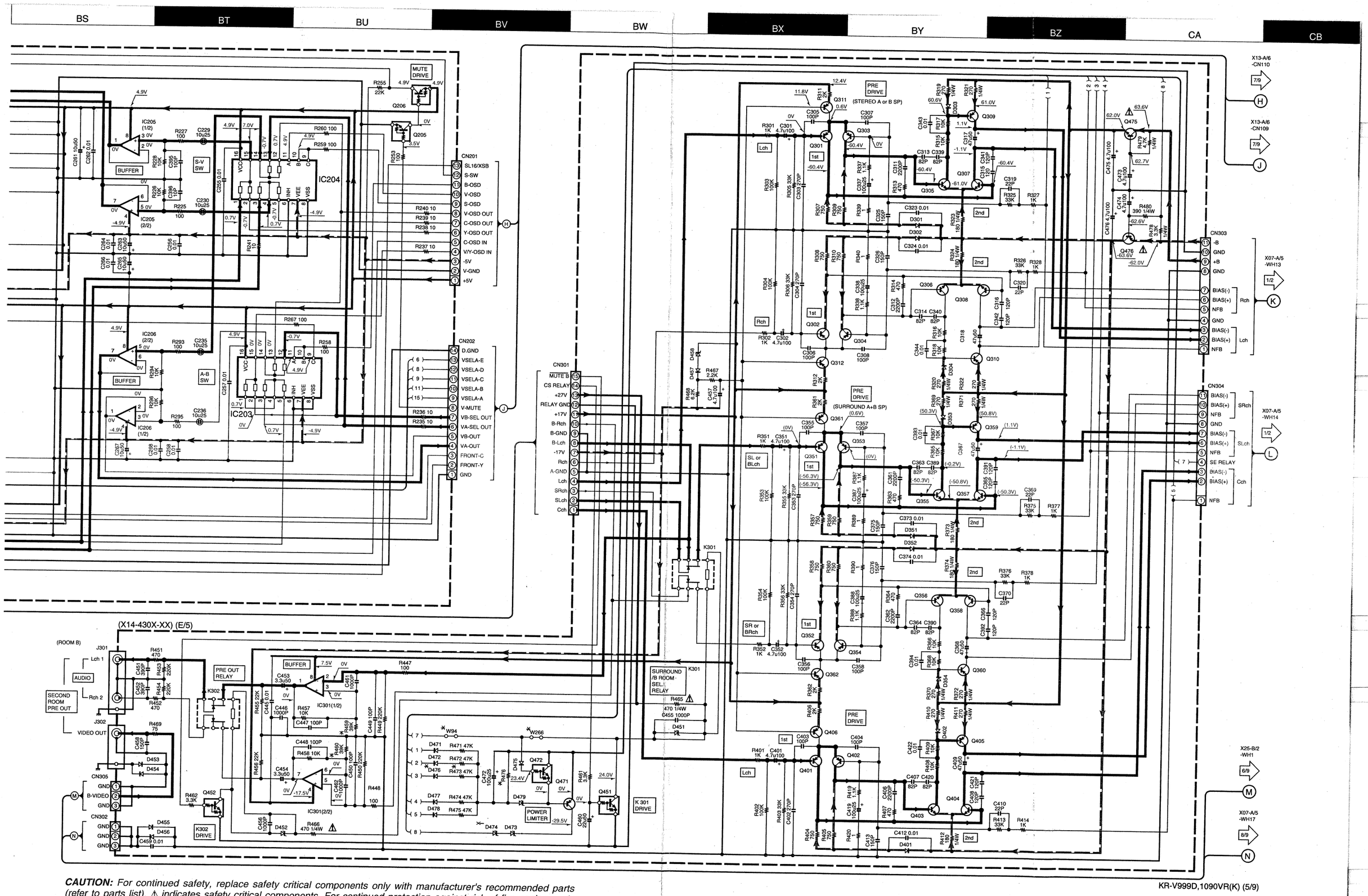


**CAUTION:** *For continued safety, replace safety critical components only with manufacturer's recommended parts (refer to parts list). ⚠ indicates safety critical components. For continued protection against risk of fire, replace only with same type and rating fuse(s). To reduce the risk of electric shock, leakage-current or resistance measurements shall be carried out (exposed parts are acceptably insulated from the supply circuit) before the appliance is returned to the customer.*

KR-V999D,1090VR(K) (5/9)

Y05-3300-10

# KR-V999D/1090VR

KENWOOD

***CAUTION:*** *For continued safety, replace safety critical components only with manufacturer's recommended parts (refer to parts list). ⚠ indicates safety critical components. For continued protection against risk of fire, replace only with same type and rating fuse(s). To reduce the risk of electric shock, leakage-current or resistance measurements shall be carried out (exposed parts are acceptably insulated from the supply circuit) before the appliance is returned to the customer.*

*The DC voltage is an actual reading measured with a high impedance type voltmeter with no signal input. The measurement value may vary depending on the measuring instruments used or on the product.*

MC14577CP
NJM4580DNJ
M4580D-D

NJM4565M
NJM4580ED
TC7W00FU

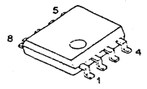

UPC7805AHF

DA204K

UN5212

UPD16311

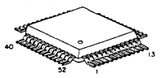

2SK246

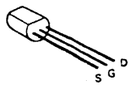

TC9162AF
TC9163AF

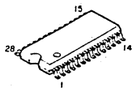

TC74HCU04AF

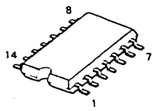

LA1836

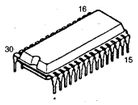

TC9412APA

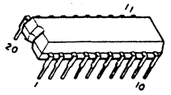

TC9162N
TC9164N

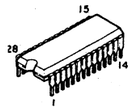

LC72131

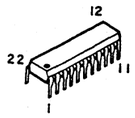

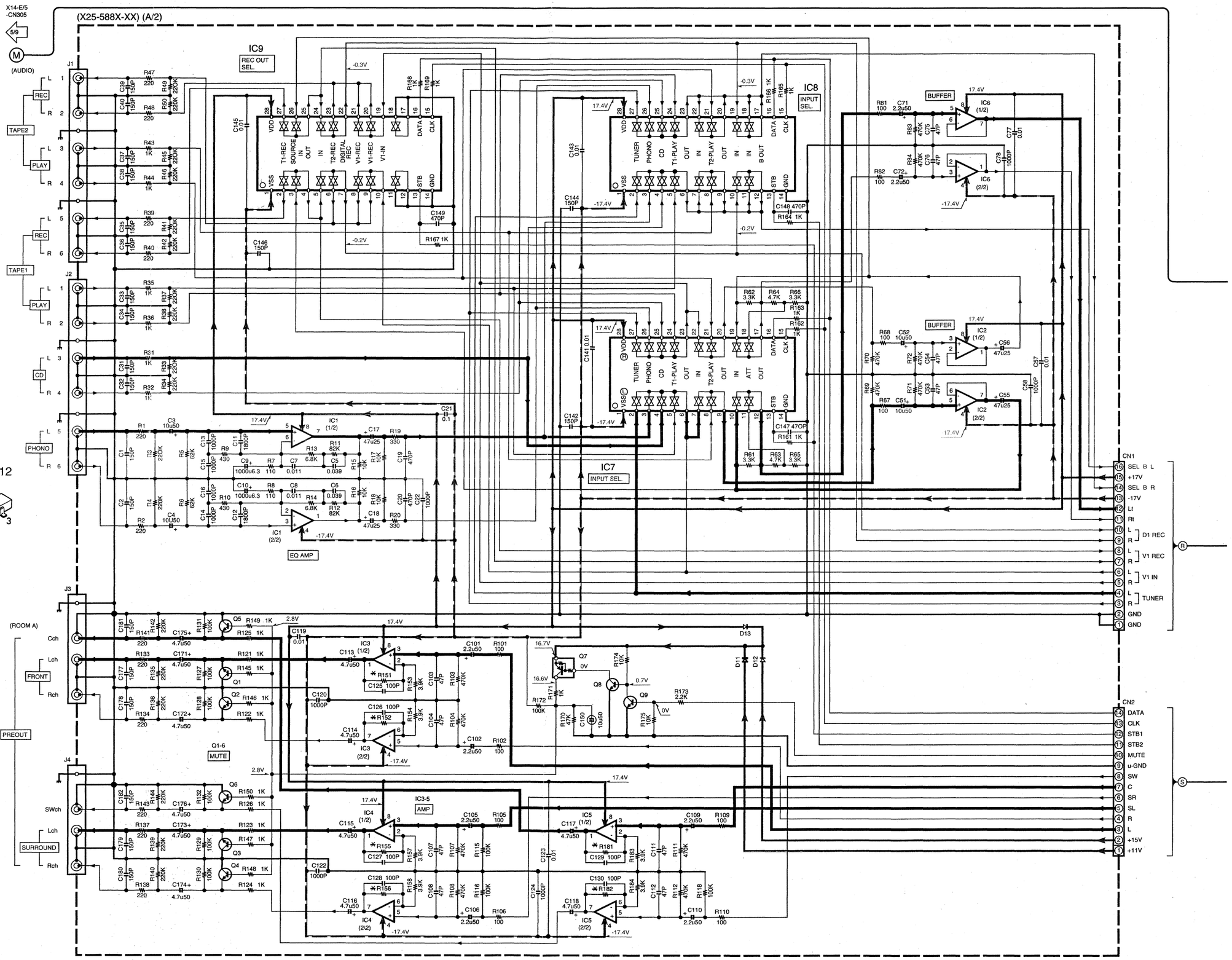

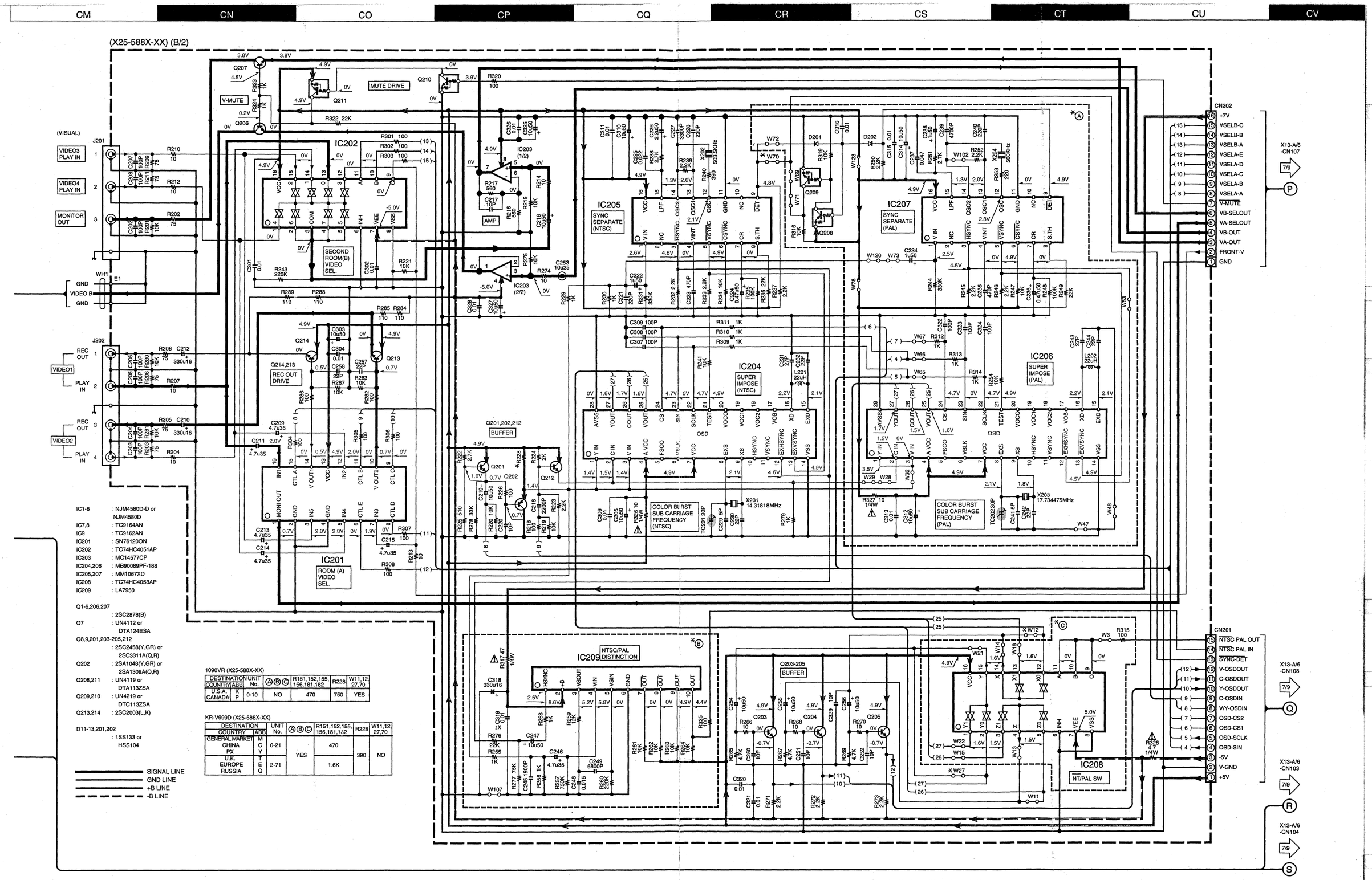


IC1-6 : NJM4580D-D or NJM4580D
IC7,8 : TC9164AN
IC9 : TC9162AN
IC201 : SN76120ON
IC202 : TC74HC4051AP
IC203 : MC14577CP
IC204,206 : MB90089PF-188
IC205,207 : MM1067XD
IC208 : TC74HC4053AP
IC209 : LA7950

Q1-6,206,207 : 2SC2878(B)
Q7 : UN4112 or DTA124ESA
Q8,9,201,203-205,212 : 2SC2458(Y,GR) or 2SC3311A(Q,R)
Q202 : 2SA1048(Y,GR) or 2SA1309A(Q,R)
Q208,211 : UN4119 or DTA113ZSA
Q209,210 : UN4219 or DTC113ZSA
Q213,214 : 2SC2003(L,K)

D11-13,201,202 : 1SS133 or HSS104

SIGNAL LINE
GND LINE
+B LINE
-B LINE

1090VR (X25-588X-XX)

| DESTINATION COUNTRY | ABB | UNIT No. | Ⓐ Ⓑ Ⓒ | R151,152,155, 156,181,182 | R228 | W11,12, 27,70 |
|---|---|---|---|---|---|---|
| U.S.A. CANADA | K P | 0-10 | NO | 470 | 750 | YES |

KR-V999D (X25-588X-XX)

| DESTINATION | ABB | UNIT No. | Ⓐ Ⓑ Ⓒ | R151,152,155, 156,181,182 | R228 | W11,12, 27,70 |
|---|---|---|---|---|---|---|
| GENERAL MARKET CHINA PX | M C Y | 0-21 | YES | 470 | 390 | NO |
| U.K. EUROPE RUSSIA | T E Q | 2-71 | | 1.6K | | |

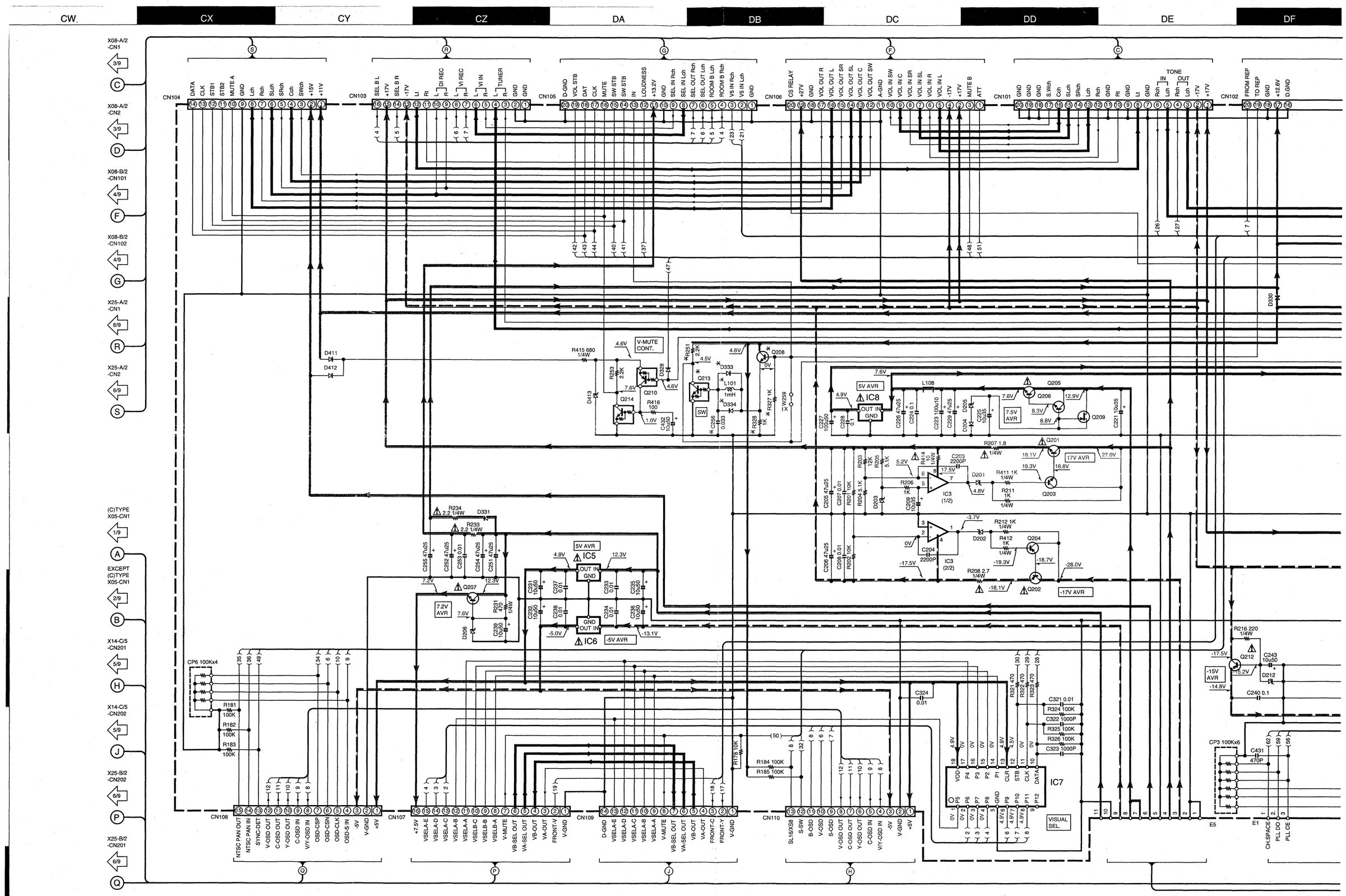


*The DC voltage is an actual reading measured with a high impedance type voltmeter with no signal input. The measurement value may vary depending on the measuring instruments used or on the product.*

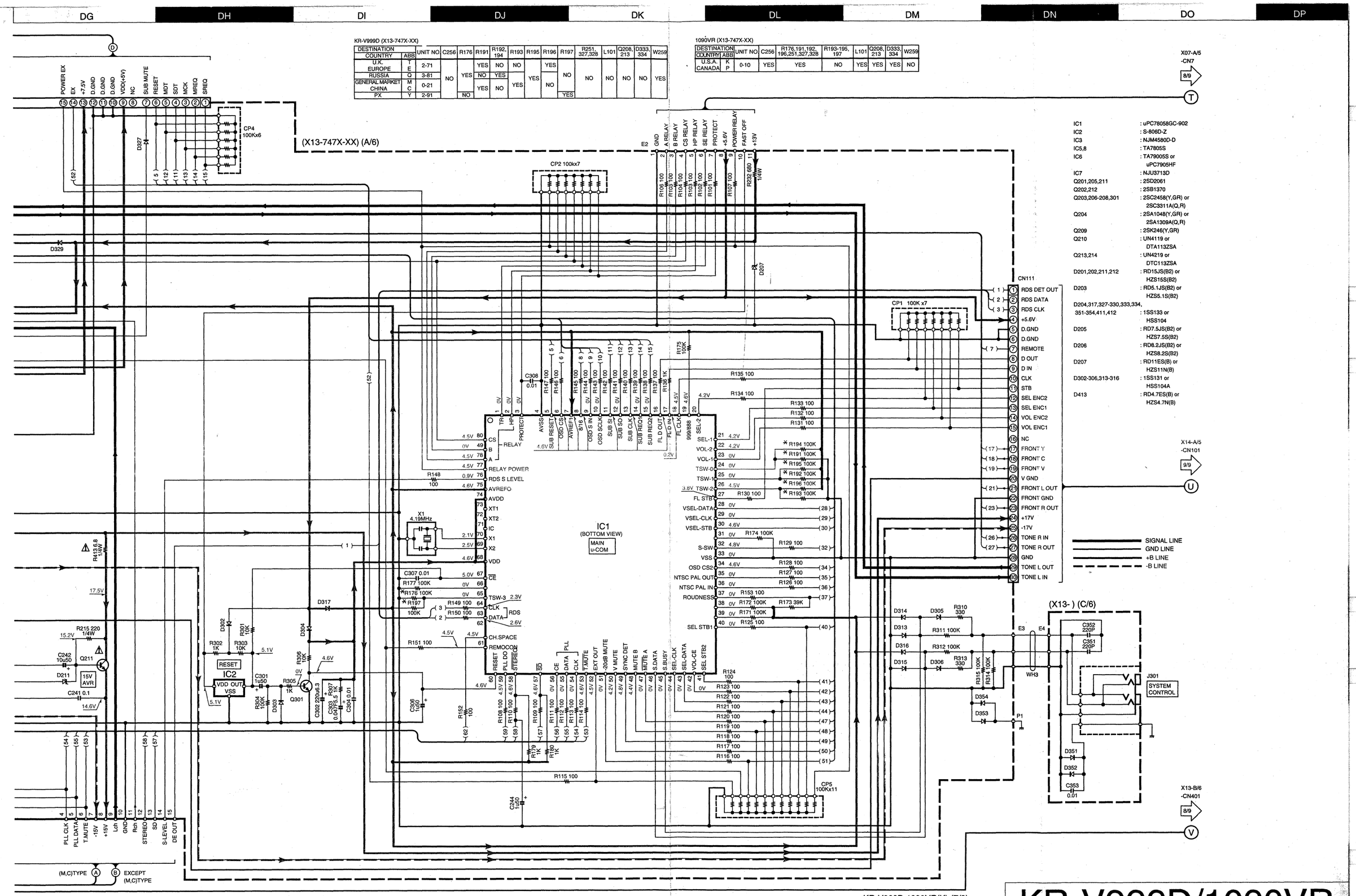


KR-V999D (X13-747X-XX)

| DESTINATION | | UNIT NO | C256 | R176 | R191 | R192, 194 | R193 | R195 | R196 | R197 | R251, 327,328 | L101 | Q208, 213 | D333, 334 | W259 |
|---|---|---|---|---|---|---|---|---|---|---|---|---|---|---|---|
| COUNTRY | ABB | | | | | | | | | | | | | | |
| U.K. | T | 2-71 | NO | YES | YES | NO | NO | YES | YES | NO | NO | NO | NO | NO | YES |
| EUROPE | E | | | | | | | | | | | | | | |
| RUSSIA | Q | 3-81 | | | NO | YES | YES | | NO | | | | | | |
| GENERAL MARKET | M | 0-21 | | | YES | NO | | | | | | | | | |
| CHINA | C | | | | | | | | | | | | | | |
| PX | Y | 2-91 | | NO | | | | | | YES | | | | | |

1090VR (X13-747X-XX)

| DESTINATION | | UNIT NO | C256 | R176,191,192, 196,251,327,328 | R193-195, 197 | L101 | Q208, 213 | D333, 334 | W259 |
|---|---|---|---|---|---|---|---|---|---|
| COUNTRY | ABB | | | | | | | | |
| U.S.A. | K | 0-10 | YES | YES | NO | YES | YES | YES | NO |
| CANADA | P | | | | | | | | |

| | |
|---|---|
| IC1 | : uPC78058GC-902 |
| IC2 | : S-806D-Z |
| IC3 | : NJM4580D-D |
| IC5,8 | : TA7805S |
| IC6 | : TA79005S or uPC7905HF |
| IC7 | : NJU3713D |
| Q201,205,211 | : 2SD2061 |
| Q202,212 | : 2SB1370 |
| Q203,206-208,301 | : 2SC2458(Y,GR) or 2SC3311A(Q,R) |
| Q204 | : 2SA1048(Y,GR) or 2SA1309A(Q,R) |
| Q209 | : 2SK246(Y,GR) |
| Q210 | : UN4119 or DTA113ZSA |
| Q213,214 | : UN4219 or DTC113ZSA |
| D201,202,211,212 | : RD15JS(B2) or HZS15S(B2) |
| D203 | : RD5.1JS(B2) or HZS5.1S(B2) |
| D204,317,327-330,333,334, 351-354,411,412 | : 1SS133 or HSS104 |
| D205 | : RD7.5JS(B2) or HZS7.5S(B2) |
| D206 | : RD8.2JS(B2) or HZS8.2S(B2) |
| D207 | : RD11ES(B) or HZS11N(B) |
| D302-306,313-316 | : 1SS131 or HSS104A |
| D413 | : RD4.7ES(B) or HZS4.7N(B) |

***CAUTION:*** *For continued safety, replace safety critical components only with manufacturer's recommended parts (refer to parts list). ⚠ indicates safety critical components. For continued protection against risk of fire, replace only with same type and rating fuse(s). To reduce the risk of electric shock, leakage-current or resistance measurements shall be carried out (exposed parts are acceptably insulated from the supply circuit) before the appliance is returned to the customer.*

KR-V999D,1090VR(K) (7/9)

Y05-3300-10

# KR-V999D/1090VR

KENWOOD

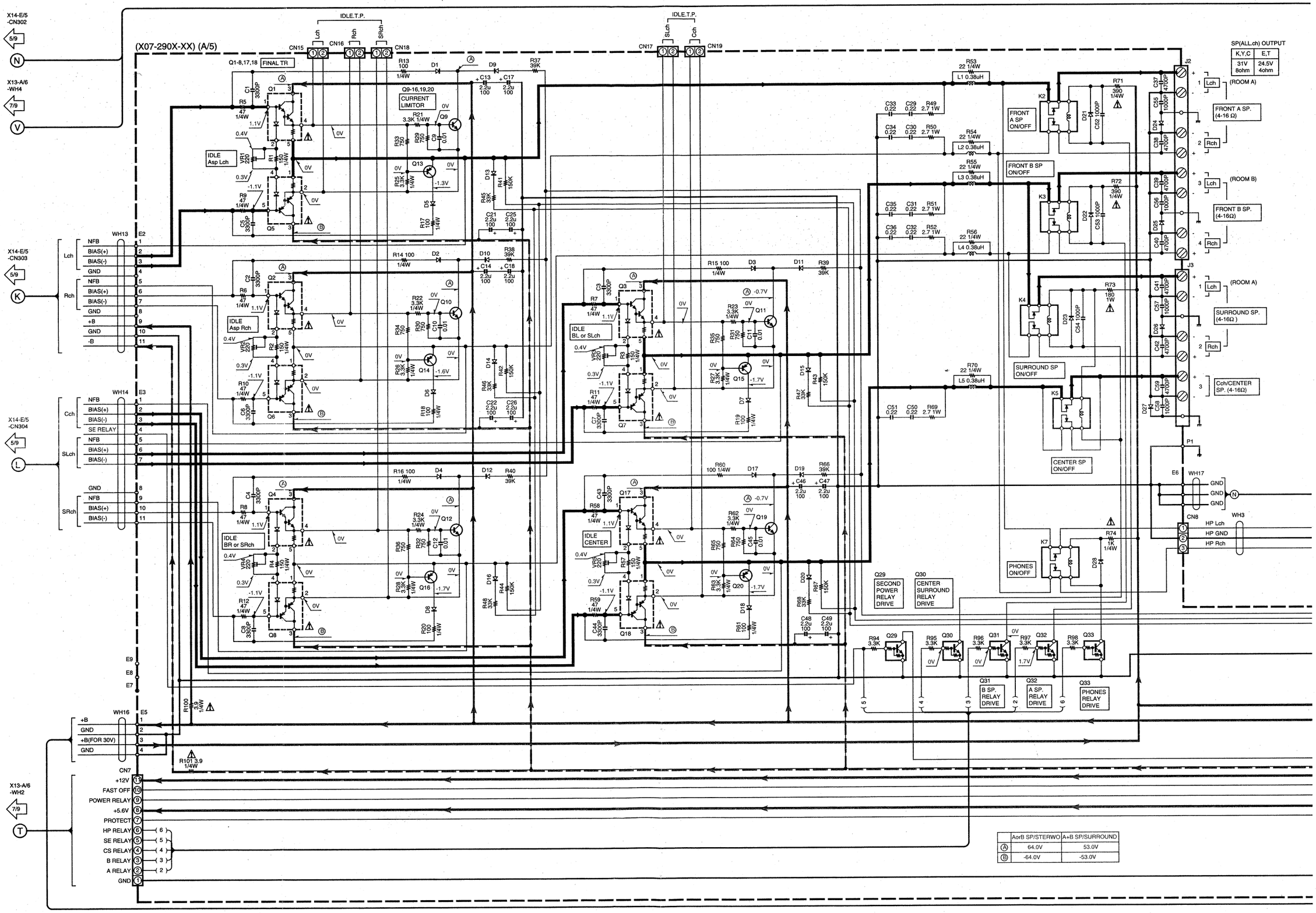
(X07-290X-XX) (A/5)
X14-E/5 -CN302
X13-A/6 -WH4
X14-E/5 -CN303
X14-E/5 -CN304
X13-A/6 -WH2
IDLE.T.P.
CN15
CN16
CN17
CN18
CN19
Q1-8,17,18 FINAL TR
Q9-16,19,20 CURRENT LIMITOR
IDLE Asp Lch
IDLE Asp Rch
IDLE BL or SLch
IDLE BR or SRch
IDLE CENTER
WH13
WH14
WH16
CN7
NFB
BIAS(+)
BIAS(-)
GND
+B
SE RELAY
+B(FOR 30V)
+12V
FAST OFF
POWER RELAY
+5.6V
PROTECT
HP RELAY
SE RELAY
CS RELAY
B RELAY
A RELAY
FRONT A SP ON/OFF
FRONT B SP ON/OFF
SURROUND SP ON/OFF
CENTER SP ON/OFF
PHONES ON/OFF
Q29 SECOND POWER RELAY DRIVE
Q30 CENTER SURROUND RELAY DRIVE
Q31 B SP. RELAY DRIVE
Q32 A SP. RELAY DRIVE
Q33 PHONES RELAY DRIVE
SP(ALL.ch) OUTPUT
K,Y,C E,T
31V 8ohm 24.5V 4ohm
(ROOM A)
FRONT A SP. (4-16 Ω)
(ROOM B)
FRONT B SP. (4-16Ω)
SURROUND SP. (4-16Ω)
Cch/CENTER SP. (4-16Ω)
WH17
CN8
WH3
HP Lch
HP GND
HP Rch
AorB SP/STERWO
A+B SP/SURROUND
64.0V
53.0V
-64.0V
-53.0V

KR-V999D (X07-290X-XX)

| DESTINATION / COUNTRY | ABB | UNIT No. | F1 | F2 | F3 | T1 | J1 | R93 | WH1 | WH2 | W181 | W182 | W183 | CN5 | CN14 | P3,4 | CN3,4 | K1 |
|---|---|---|---|---|---|---|---|---|---|---|---|---|---|---|---|---|---|---|
| GENERAL MARKET | M | 0-21 | T3.15AL 250V | T3.15AL 250V | NO | L07-0865-05 | E03-0149-05 | NO | E35-1325-05 | E35-1326-05 | NO | NO | YES | NO | YES | YES | YES | S76-0070-05 TV-5 |
| CHINA | C | 3-01 | | NO | | L07-2114-05 | E03-0330-05 | | | | | YES | | YES | | NO | NO | |
| PX | Y | 2-91 | | T3.15AL 250V | | L07-0865-05 | E03-0148-05 | | | | YES | NO | | | NO | | YES | |
| U.K. | T | 0-51 | | NO | | L07-0867-05 | E03-0310-05 | | E35-1426-05 | E35-1828-05 | NO | YES | | NO | YES | NO | NO | |
| EUROPE | E | 2-71 | | | T2.5AL 250V | L07-0867-05 | E03-0149-05 | | E35-1426-05 | E35-1828-05 | | | NO | NO | | YES | YES | |
| RUSSIA | Q | 3-81 | | | NO | L07-2114-05 | | | NO | | | | YES | | | | | |

KR-V999D (X13-747X-XX)

| DESTINATION / COUNTRY | ABB | UNIT NO | C421 | R401 | W301 | WH404 405 | F11-13, 17 | F14 | F15, 16 | S1 |
|---|---|---|---|---|---|---|---|---|---|---|
| U.K. / EUROPE | T / E | 2-71 | YES | NO | YES | YES | T1.25A L 250V | T500mA L 250V | T1.6A L 250V | YES |
| GENERAL MARKET / CHINA | M / C | 0-21 | | | | | | | | |
| RUSSIA | Q | 3-81 | | | | | | | | |
| PX | Y | 2-91 | NO | | | NO | | | | NO |

1090VR (X07-290X-XX)

| DESTINATION / COUNTRY | ABB | UNIT No. | F1 | F2 | F3 | T1 | J1 | R93 | WH1 | WH2 | W181 | W182 | W183 | CN5 | CN14 | P3,4 | CN3,4 | K1 |
|---|---|---|---|---|---|---|---|---|---|---|---|---|---|---|---|---|---|---|
| U.S.A. / CANADA | K / P | 0-10 | 10A 125V | NO | NO | L07-0864-05 | E03-0148-05 | YES | E35-1426-05 | E35-1828-05 | YES | YES | YES | YES | NO | NO | NO | S76-0065-05 TV-8 |

1090VR (X13-747X-XX)

| DESTINATION / COUNTRY | ABB | UNIT NO | C421 | R401 | W301 | WH404 405 | F11-13, 17 | F14 | F15, 16 | S1 |
|---|---|---|---|---|---|---|---|---|---|---|
| U.S.A. / CANADA | K / P | 0-10 | NO | YES | NO | NO | 1.25A 125V | 1A 125V | 1.6A 125V | NO |

(X07-)

| | | | |
|---|---|---|---|
| Q1-4,17 | : TRAITR4N 5✱ | D1-28,31,35-37, 43,45-47 | : 1SS131 or HSS104A |
| Q5-8,18 | : TRAITR4P 5✱ | D29 | : RD11ES(B2) or HZS11N(B2) |
| Q9-12,19 | : 2SC2631(R,S) | D30 | : RD15ES(B2) or HZS15N(B2) |
| Q13-16,20,21 | : 2SA992(F,E) | D32,33 | : D5FB20-4002-L2 |
| Q22,23 | : 2SC1845(F,E) | D34 | : RD6.2ES(B2) or HZS6.2N(B2) |
| Q24 | : 2SD2061(E,F) or 2SD2012 | D38-41,405 | : S5688B or 1SR139-400 |
| Q25,37 | : UN4216 or DTC143TSA | D42 | : RD2.7ES(B2) or HZS2.7N(B2) |
| Q26,27,29-33 | : UN4219 or DTC113ZSA | D44 | : RD5.1JS(B2) or HZS5.1S(B2) |
| Q28,36,38 | : UN4212 or DTC124ESA | D401-404 | : 1B4B41 |
| Q34 | : 2SC2003(L,K) | D406,407 | : RD7.5JS(B) or HZS7.5S(B) |
| Q35 | : 2SC3940A(R,S) or 2SD863(E,F) | | |

(X13-)

| | |
|---|---|
| D401-404 | : 1B4B41 |
| D405 | : S5688B or 1SR139-400 |
| D406,407 | : RD7.1JS(B) or HZS7.5S(B) |

SIGNAL LINE
GND LINE
+B LINE
-B LINE

***CAUTION:*** *For continued safety, replace safety critical components only with manufacturer's recommended parts (refer to parts list). ⚠ indicates safety critical components. For continued protection against risk of fire, replace only with same type and rating fuse(s). To reduce the risk of electric shock, leakage-current or resistance measurements shall be carried out (exposed parts are acceptably insulated from the supply circuit) before the appliance is returned to the customer.*

*The DC voltage is an actual reading measured with a high impedance type voltmeter with no signal input. The measurement value may vary depending on the measuring instruments used or on the product.*

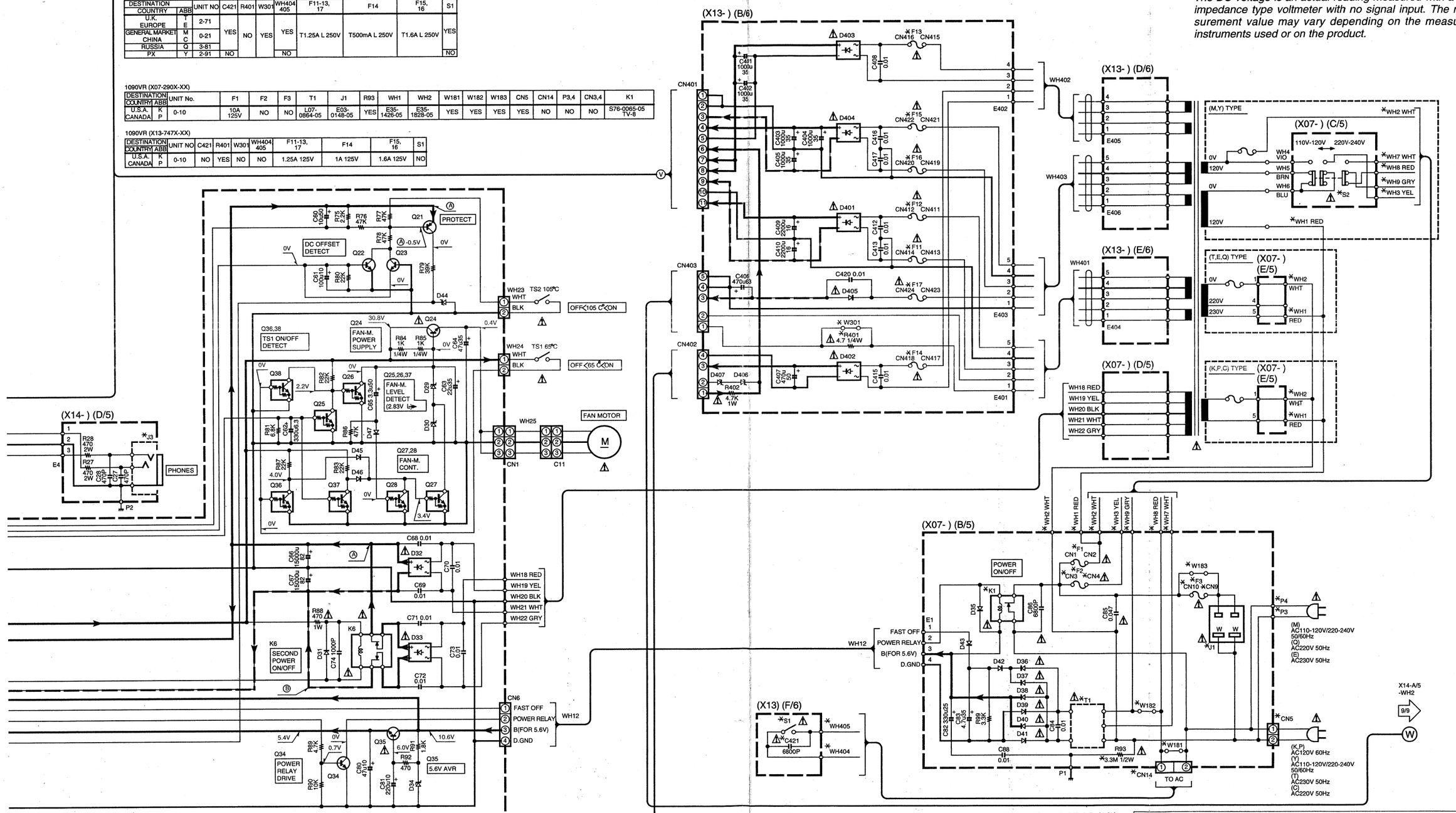


KR-V999D,1090VR(K) (8/9)

Y05-3300-10

# KR-V999D/1090VR

KENWOOD

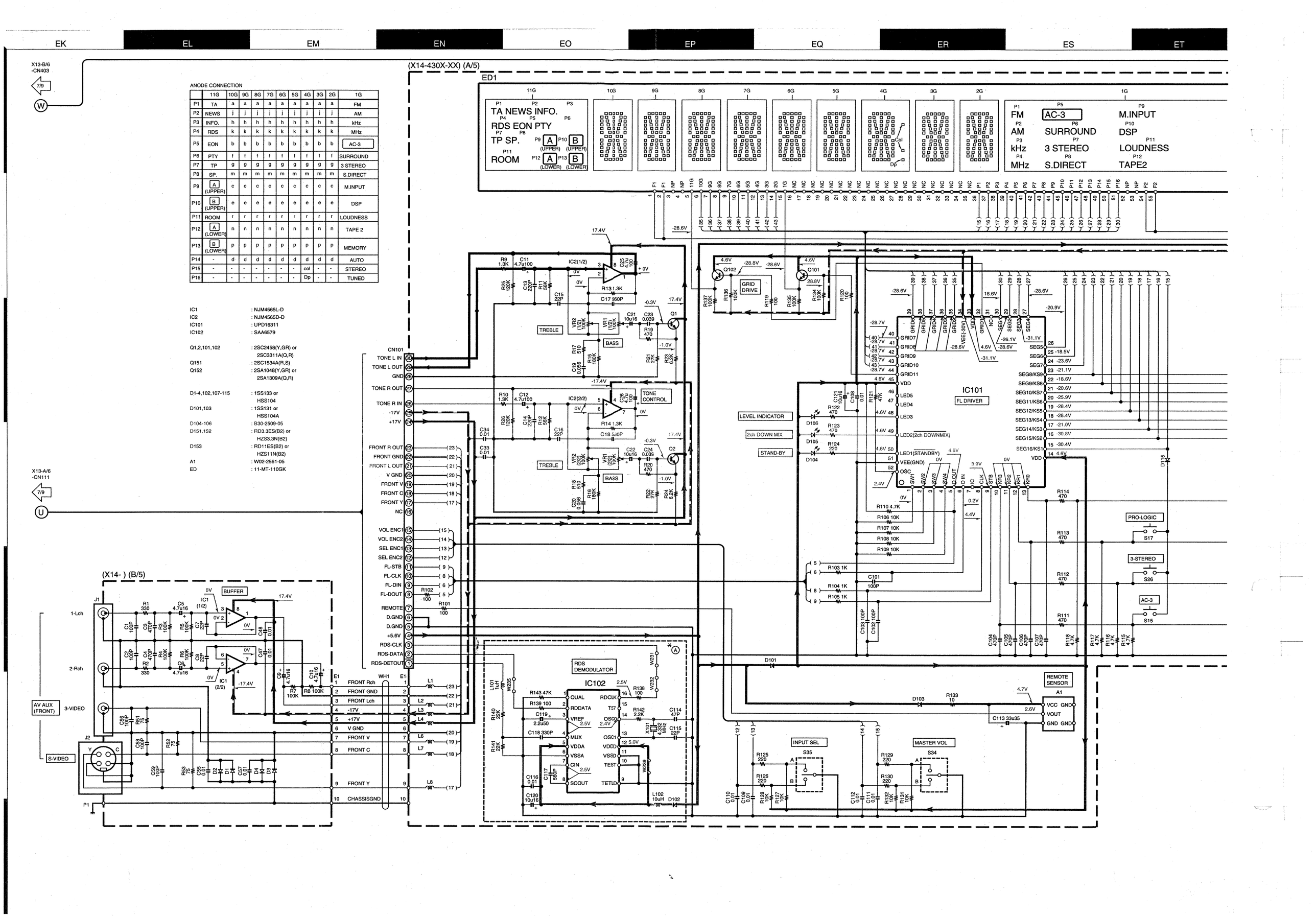


ANODE CONNECTION

| | 11G | 10G | 9G | 8G | 7G | 6G | 5G | 4G | 3G | 2G | 1G |
|---|---|---|---|---|---|---|---|---|---|---|---|
| P1 | TA | a | a | a | a | a | a | a | a | a | FM |
| P2 | NEWS | j | j | j | j | j | j | j | j | j | AM |
| P3 | INFO. | h | h | h | h | h | h | h | h | h | kHz |
| P4 | RDS | k | k | k | k | k | k | k | k | k | MHz |
| P5 | EON | b | b | b | b | b | b | b | b | b | AC-3 |
| P6 | PTY | f | f | f | f | f | f | f | f | f | SURROUND |
| P7 | TP | g | g | g | g | g | g | g | g | g | 3 STEREO |
| P8 | SP. | m | m | m | m | m | m | m | m | m | S.DIRECT |
| P9 | A (UPPER) | c | c | c | c | c | c | c | c | c | M.INPUT |
| P10 | B (UPPER) | e | e | e | e | e | e | e | e | e | DSP |
| P11 | ROOM | r | r | r | r | r | r | r | r | r | LOUDNESS |
| P12 | A (LOWER) | n | n | n | n | n | n | n | n | n | TAPE 2 |
| P13 | B (LOWER) | p | p | p | p | p | p | p | p | p | MEMORY |
| P14 | - | d | d | d | d | d | d | d | d | d | AUTO |
| P15 | - | - | - | - | - | - | - | col | - | - | STEREO |
| P16 | - | - | - | - | - | - | - | Dp | - | - | TUNED |

| | |
|---|---|
| IC1 | : NJM4565L-D |
| IC2 | : NJM4565D-D |
| IC101 | : UPD16311 |
| IC102 | : SAA6579 |
| Q1,2,101,102 | : 2SC2458(Y,GR) or 2SC3311A(Q,R) |
| Q151 | : 2SC1534A(R,S) |
| Q152 | : 2SA1048(Y,GR) or 2SA1309A(Q,R) |
| D1-4,102,107-115 | : 1SS133 or HSS104 |
| D101,103 | : 1SS131 or HSS104A |
| D104-106 | : B30-2509-05 |
| D151,152 | : RD3.3ES(B2) or HZS3.3N(B2) |
| D153 | : RD11ES(B2) or HZS11N(B2) |
| A1 | : W02-2561-05 |
| ED | : 11-MT-110GK |

* New Parts
Parts without **Parts No.** are not supplied.
Les articles non mentionnes dans le **Parts No.** ne sont pas fournis.
Teile ohne **Parts No.** werden nicht geliefert.

21

| Ref. No | Address | New Parts | Parts No. | Description | Destination | Remarks |
|---|---|---|---|---|---|---|
| D201,202 | | | RD15JS(B) | ZENER DIODE | | |
| D203 | | | HZS5.1S(B2) | ZENER DIODE | | |
| D203 | | | RD5.1JS(B2) | ZENER DIODE | | |
| D204 | | | HSS104A | DIODE | | |
| D204 | | | 1SS131 | DIODE | | |
| D205 | | | HZS8.2S(B2) | ZENER DIODE | | |
| D205 | | | RD8.2JS(B2) | ZENER DIODE | | |
| D206 | | | HZS7.5S(B) | ZENER DIODE | | |
| D206 | | | RD7.5JS(B) | ZENER DIODE | | |
| D207 | | | HZS11N(B) | ZENER DIODE | | |
| D207 | | | RD11ES(B) | ZENER DIODE | | |
| D211,212 | | | HZS15S(B) | ZENER DIODE | | |
| D211,212 | | | RD15JS(B) | ZENER DIODE | | |
| D302-306 | | | HSS104A | DIODE | | |
| D302-306 | | | 1SS131 | DIODE | | |
| D313-317 | | | HSS104 | DIODE | | |
| D313-317 | | | 1SS133 | DIODE | | |
| D327-331 | | | HSS104 | DIODE | | |
| D327-331 | | | 1SS133 | DIODE | | |
| D333,334 | | | HSS104 | DIODE | KP | |
| D333,334 | | | 1SS133 | DIODE | KP | |
| D351-354 | | | HSS104 | DIODE | | |
| D351-354 | | | 1SS133 | DIODE | | |
| ⚠ D401-404 | | | 1B4B41 | DIODE | | |
| D405 | | | S5688B | DIODE | | |
| D405 | | | 1SR139-400 | DIODE | | |
| D406,407 | | | HZS7.5S(B) | ZENER DIODE | | |
| D406,407 | | | RD7.5JS(B) | ZENER DIODE | | |
| D411,412 | | | HSS104 | DIODE | | |
| D411,412 | | | 1SS133 | DIODE | | |
| D413 | | | HZS4.7N(B) | ZENER DIODE | | |
| D413 | | | RD4.7ES(B) | ZENER DIODE | | |
| IC1 | | * | UPD78058GC-902 | MI-COM IC | | |
| IC2 | | | S-806D-Z | ANALOGUE IC | | |
| IC3 | | | NJM4580D-D | IC(OP AMP X2) | | |
| ⚠ IC5 | | | TA7805S | IC(VOLTAGE REGULATOR/ +5V) | | |
| ⚠ IC5 | | | UPC7805AHF | ANALOGUE IC | | |
| ⚠ IC6 | | | TA79005S | IC(VOLTAGE REGULATOR/ -5V) | | |
| IC7 | | | NJU3713D | MOS-IC | | |
| ⚠ IC8 | | | TA7805S | IC(VOLTAGE REGULATOR/ +5V) | | |
| IC8 | | | UPC7805AHF | ANALOGUE IC | | |
| ⚠ Q201 | | | 2SD2061 | TRANSISTOR | | |
| ⚠ Q202 | | | 2SB1370 | TRANSISTOR | | |
| Q203 | | | 2SC2458(Y,GR) | TRANSISTOR | | |
| Q203 | | | 2SC3311A(Q,R) | TRANSISTOR | | |
| Q204 | | | 2SA1048(Y,GR) | TRANSISTOR | | |
| Q204 | | | 2SA1309A(Q,R) | TRANSISTOR | | |
| ⚠ Q205 | | | 2SD2061 | TRANSISTOR | | |
| ⚠ Q206,207 | | | 2SC2458(Y,GR) | TRANSISTOR | | |
| ⚠ Q206,207 | | | 2SC3311A(Q,R) | TRANSISTOR | | |
| Q208 | | | 2SC2458(Y,GR) | TRANSISTOR | KP | |
| Q208 | | | 2SC3311A(Q,R) | TRANSISTOR | KP | |
| Q209 | | | 2SK246(Y,GR) | FET | | |
| Q210 | | | DTA113ZSA | DIGITAL TRANSISTOR | | |
| Q210 | | | UN4119 | DIGITAL TRANSISTOR | | |

**L** : Scandinavia **K** : USA **P** : Canada **R** : Mexico
**Y** : PX(Far East, Hawaii) **T** : Europe **E** : Europe **G** : Germany
**Y** : AAFES(Europe) **X** : Australia **M** : Other Areas **Q** : Russia
⚠ indicates safety critical components.



* New Parts
Parts without **Parts No.** are not supplied.
Les articles non mentionnes dans le **Parts No.** ne sont pas fournis.
Teile ohne **Parts No.** werden nicht geliefert.

22

| Ref. No | Address | New Parts | Parts No. | Description | Destination | Remarks |
|---|---|---|---|---|---|---|
| ⚠ Q211 | | | 2SD2061 | TRANSISTOR | | |
| ⚠ Q212 | | | 2SB1370 | TRANSISTOR | | |
| Q213 | | | DTC113ZSA | DIGITAL TRANSISTOR | KP | |
| Q213 | | | UN4219 | DIGITAL TRANSISTOR | KP | |
| Q214 | | | DTC113ZSA | DIGITAL TRANSISTOR | | |
| Q214 | | | UN4219 | DIGITAL TRANSISTOR | | |
| Q301 | | | 2SC2458(Y,GR) | TRANSISTOR | | |
| Q301 | | | 2SC3311A(Q,R) | TRANSISTOR | | |
| **DISPLAY UNIT (X14-430X-XX)** | | | | | | |
| D104-106 | | * | B30-2509-05 | LED(RED) | | |
| C1 ,2 | | | C91-0745-05 | CERAMIC 100PF K | | |
| C3 ,4 | | | C91-0753-05 | CHIP C 470PF K | | |
| C5 ,6 | | | C90-3224-05 | ELECTRO 4.7UF 16WV | | |
| C7 ,8 | | | C91-0729-05 | CERAMIC 22PF J | | |
| C9 ,10 | | | C90-3224-05 | ELECTRO 4.7UF 16WV | | |
| C11 ,12 | | | CE04KW2A4R7M | ELECTRO 4.7UF 100WV | | |
| C13 ,14 | | * | CC45FSL1H221JN | CERAMIC 220PF J | | |
| C15 ,16 | | * | CC45FSL1H220JN | CERAMIC 22PF J | | |
| C17 ,18 | | * | CK45FB1H561KMM | CERAMIC 560PF K | | |
| C19 ,20 | | | CQ93FMG1H563J | MYLAR 0.056UF J | | |
| C21 ,22 | | | CE04KW1C100M | ELECTRO 10UF 16WV | | |
| C23 ,24 | | | CQ93FMG1H393J | MYLAR 0.039UF J | | |
| C25 ,26 | | | CE04KW2A4R7M | ELECTRO 4.7UF 100WV | | |
| C27 ,28 | | * | CK45FB1H471KMM | CERAMIC 470PF K | | |
| C33 ,34 | | | CQ93FMG1H103J | MYLAR 0.010UF J | | |
| C47 ,48 | | | CQ93FMG1H103J | MYLAR 0.010UF J | | |
| C55 | | | C91-0769-05 | CERAMIC 0.010UF K | | |
| C56 | | | C91-0745-05 | CERAMIC 100PF K | | |
| C57 | | | C91-0769-05 | CERAMIC 0.010UF K | | |
| C58 ,59 | | | C91-0745-05 | CERAMIC 100PF K | | |
| C101-103 | | * | CC45FSL1H101JN | CERAMIC 100PF J | | |
| C104-107 | | | C91-0753-05 | CHIP C 470PF K | | |
| C108-112 | | | CK45FF1H103ZMM | CERAMIC 0.010UF Z | | |
| C113 | | | CE04KW1V330M | ELECTRO 33UF 35WV | | |
| C114 | | * | CC45FCH1H470JN | CERAMIC 47PF J | KPYTEQ | |
| C115 | | * | CC45FCH1H220JN | CERAMIC 22PF J | KPYTEQ | |
| C116 | | * | CK45FF1H103ZMM | CERAMIC 0.010UF Z | KPYTEQ | |
| C117 | | * | CK45FB1H561KMM | CERAMIC 560PF K | KPYTEQ | |
| C118 | | * | CC45FSL1H331JN | CERAMIC 330PF J | KPYTEQ | |
| C119 | | | CE04KW1H2R2M | ELECTRO 2.2UF 50WV | KPYTEQ | |
| C120 | | | CE04KW1C100M | ELECTRO 10UF 16WV | KPYTEQ | |
| C121 | | | CE04KW1C100M | ELECTRO 10UF 16WV | | |
| C151 | | | CE04KW1H220M | ELECTRO 22UF 50WV | | |
| C152 | | | CE04KW1H100M | ELECTRO 10UF 50WV | | |
| C153,154 | | | CK45FF1H103ZMM | CERAMIC 0.010UF Z | | |
| C155,156 | | | CE04KW1V4R7M | ELECTRO 4.7UF 35WV | | |
| C201-214 | | * | CC45FSL1H101JN | CERAMIC 100PF J | | |
| C215 | | | CE04KW1H4R7M | ELECTRO 4.7UF 50WV | | |
| C216 | | | CE04KW1V4R7M | ELECTRO 4.7UF 35WV | | |
| C217 | | | CQ93FMG1H223J | MYLAR 0.022UF J | | |
| C218 | | | CE04KW1C331M | ELECTRO 330UF 16WV | | |
| C219 | | | CE04KW1H4R7M | ELECTRO 4.7UF 50WV | | |
| C220 | | | CE04KW1V4R7M | ELECTRO 4.7UF 35WV | | |
| C221 | | | CQ93FMG1H223J | MYLAR 0.022UF J | | |

**L** : Scandinavia **K** : USA **P** : Canada **R** : Mexico
**Y** : PX(Far East, Hawaii) **T** : Europe **E** : Europe **G** : Germany
**Y** : AAFES(Europe) **X** : Australia **M** : Other Areas **Q** : Russia
⚠ indicates safety critical components.

KR-V999D/1090VR
PARTS LIST

* New Parts
Parts without **Parts No.** are not supplied.
Les articles non mentionnes dans le **Parts No.** ne sont pas fournis.
Teile ohne **Parts No.** werden nicht geliefert.

23

| Ref. No | Address | New Parts | Parts No. | Description | Destination | Remarks |
|---|---|---|---|---|---|---|
| C222 | | | CE04KW1C331M | ELECTRO 330UF 16WV | | |
| C223 | | | CE04KW1H4R7M | ELECTRO 4.7UF 50WV | | |
| C224 | | | CE04KW1V4R7M | ELECTRO 4.7UF 35WV | | |
| C225 | | | CE04KW1H4R7M | ELECTRO 4.7UF 50WV | | |
| C226 | | | CE04KW1V4R7M | ELECTRO 4.7UF 35WV | | |
| C227 | | | CQ93FMG1H223J | MYLAR 0.022UF J | | |
| C228 | | | CE04KW1V4R7M | ELECTRO 4.7UF 35WV | | |
| C229,230 | | | CE04HW1E100M | NP-ELEC 10UF 25WV | | |
| C231-234 | | * | CC45FSL1H220JN | CERAMIC 22PF J | | |
| C235,236 | | | CE04HW1E100M | NP-ELEC 10UF 25WV | | |
| C251 | | | CE04KW1H100M | ELECTRO 10UF 50WV | | |
| C252 | | * | CK45FF1H103ZMM | CERAMIC 0.010UF Z | | |
| C253 | | | CE04KW1H100M | ELECTRO 10UF 50WV | | |
| C254-258 | | * | CK45FF1H103ZMM | CERAMIC 0.010UF Z | | |
| C259 | | * | CK45FB1H102KMM | CERAMIC 1000PF K | | |
| C260 | | * | CK45FF1H103ZMM | CERAMIC 0.010UF Z | | |
| C261 | | | CE04KW1H100M | ELECTRO 10UF 50WV | | |
| C262 | | * | CK45FF1H103ZMM | CERAMIC 0.010UF Z | | |
| C263 | | | CE04KW1H100M | ELECTRO 10UF 50WV | | |
| C264 | | * | CK45FF1H103ZMM | CERAMIC 0.010UF Z | | |
| C265 | | | CE04KW1H100M | ELECTRO 10UF 50WV | | |
| C266 | | * | CK45FF1H103ZMM | CERAMIC 0.010UF Z | | |
| C267 | | | CE04KW1H100M | ELECTRO 10UF 50WV | | |
| C268 | | * | CK45FF1H103ZMM | CERAMIC 0.010UF Z | | |
| C301,302 | | | CE04KW2A4R7M | ELECTRO 4.7UF 100WV | | |
| C303,304 | | * | CC45FSL1H271JN | CERAMIC 270PF J | | |
| C305-308 | | * | CC45FSL1H101JN | CERAMIC 100PF J | | |
| C311,312 | | | CQ93FMG1H222J | MYLAR 2200PF J | | |
| C313,314 | | * | CC45FSL1H820JN | CERAMIC 82PF J | | |
| C315,316 | | * | CC45FSL1H121JN | CERAMIC 120PF J | | |
| C317,318 | | | CE04KW1H470M | ELECTRO 47UF 50WV | | |
| C319,320 | | * | CC45FSL1H220JN | CERAMIC 22PF J | | |
| C323,324 | | | CQ93FMG1H103J | MYLAR 0.010UF J | | |
| C325,326 | | * | CC45FSL1H151JN | CERAMIC 150PF J | | |
| C337,338 | | | CE04KW1E101M | ELECTRO 100UF 25WV | | |
| C339,340 | | * | CC45FSL1H820JN | CERAMIC 82PF J | | |
| C341,342 | | * | CC45FSL1H121JN | CERAMIC 120PF J | | |
| C343,344 | | | CQ93FMG1H103J | MYLAR 0.010UF J | | |
| C351,352 | | | CE04KW2A4R7M | ELECTRO 4.7UF 100WV | | |
| C353,354 | | * | CC45FSL1H271JN | CERAMIC 270PF J | | |
| C355-358 | | * | CC45FSL1H101JN | CERAMIC 100PF J | | |
| C361,362 | | | CQ93FMG1H222J | MYLAR 2200PF J | | |
| C363,364 | | * | CC45FSL1H820JN | CERAMIC 82PF J | | |
| C365,366 | | * | CC45FSL1H121JN | CERAMIC 120PF J | | |
| C367,368 | | | CE04KW1H470M | ELECTRO 47UF 50WV | | |
| C369,370 | | * | CC45FSL1H220JN | CERAMIC 22PF J | | |
| C373,374 | | | CQ93FMG1H103J | MYLAR 0.010UF J | | |
| C375,376 | | * | CC45FSL1H151JN | CERAMIC 150PF J | | |
| C387,388 | | | CE04KW1E101M | ELECTRO 100UF 25WV | | |
| C389,390 | | * | CC45FSL1H820JN | CERAMIC 82PF J | | |
| C391,392 | | * | CC45FSL1H121JN | CERAMIC 120PF J | | |
| C393,394 | | | CQ93FMG1H103J | MYLAR 0.010UF J | | |
| C395 | | * | CC45FSL1H101JN | CERAMIC 100PF J | | |
| C396 | | * | CC45FSL1H100DN | CERAMIC 10PF D | | |
| C401 | | | CE04KW2A4R7M | ELECTRO 4.7UF 100WV | | |

**L** : Scandinavia **K** : USA **P** : Canada **R** : Mexico
**Y** : PX(Far East, Hawaii) **T** : Europe **E** : Europe **G** : Germany
**Y** : AAFES(Europe) **X** : Australia **M** : Other Areas **Q** : Russia
⚠ indicates safety critical components.



* New Parts
Parts without **Parts No.** are not supplied.
Les articles non mentionnes dans le **Parts No.** ne sont pas fournis.
Teile ohne **Parts No.** werden nicht geliefert.

24

| Ref. No | Address | New Parts | Parts No. | Description | Destination | Remarks |
|---|---|---|---|---|---|---|
| C402 | | * | CC45FSL1H271JN | CERAMIC 270PF J | | |
| C403,404 | | * | CC45FSL1H101JN | CERAMIC 100PF J | | |
| C406 | | | CQ93FMG1H222J | MYLAR 2200PF J | | |
| C407 | | * | CC45FSL1H820JN | CERAMIC 82PF J | | |
| C408 | | * | CC45FSL1H121JN | CERAMIC 120PF J | | |
| C409 | | | CE04KW1H470M | ELECTRO 47UF 50WV | | |
| C410 | | * | CC45FSL1H220JN | CERAMIC 22PF J | | |
| C412 | | | CQ93FMG1H103J | MYLAR 0.010UF J | | |
| C413 | | | CC45FSL1H151JN | CERAMIC 150PF J | | |
| C419 | | | CE04KW1E101M | ELECTRO 100UF 25WV | | |
| C420 | | * | CC45FSL1H820JN | CERAMIC 82PF J | | |
| C421 | | * | CC45FSL1H121JN | CERAMIC 120PF J | | |
| C422 | | | CQ93FMG1H103J | MYLAR 0.010UF J | | |
| C445 | | | CQ93FMG1H103J | MYLAR 0.010UF J | | |
| C446 | | | CQ93FMG1H102J | MYLAR 1000PF J | | |
| C447-450 | | * | CC45FSL1H101JN | CERAMIC 100PF J | | |
| C451,452 | | * | CK45FB1H391KMM | CERAMIC 390PF K | | |
| C453,454 | | | CE04KW1H3R3M | ELECTRO 3.3UF 50WV | | |
| C455,456 | | | CQ93FMG1H102J | MYLAR 1000PF J | | |
| C457 | | | CE04KW2A4R7M | ELECTRO 4.7UF 100WV | | |
| C458 | | * | CC45FSL1H151JN | CERAMIC 150PF J | | |
| C459 | | * | CK45FF1H103ZMM | CERAMIC 0.010UF Z | | |
| C460 | | | CE04KW1H220M | ELECTRO 22UF 50WV | | |
| C461,462 | | * | CK45FB1H102KMM | CERAMIC 1000PF K | | |
| C472 | | | CE04KW1E101M | ELECTRO 100UF 25WV | | |
| C473-476 | | | CE04KW2A4R7M | ELECTRO 4.7UF 100WV | | |
| CN101 | | | E40-4796-05 | PIN ASSY | | |
| CN201 | | * | E40-9829-05 | SOCKET FOR PIN ASSY | | |
| CN202 | | | E40-9830-05 | SOCKET FOR PIN ASSY | | |
| CN301 | | | E40-4609-05 | PIN ASSY | | |
| CN302 | | | E40-4293-05 | FLAT CABLE CONNECTOR | | |
| CN303,304 | | | E40-4808-05 | PIN ASSY | | |
| CN305 | | | E40-4293-05 | FLAT CABLE CONNECTOR | | |
| J1 | | | E63-0129-05 | PHONO JACK | | |
| J2 | | | E56-0012-05 | CYLINDRICAL RECEPTACLE | | |
| J3 | | | E11-0271-05 | PHONE JACK (METAL SLEEVE) | MCTEQ | |
| J3 | | | E11-0272-05 | PHONE JACK | KPY | |
| J201 | | | E56-0014-05 | CYLINDRICAL RECEPTACLE | | |
| J202,203 | | | E56-0011-05 | CYLINDRICAL RECEPTACLE | | |
| J301 | | | E63-0095-05 | PHONO JACK | | |
| J302 | | * | E63-1005-05 | PHONO JACK | | |
| CN111 | | | J19-5626-03 | HOLDER | | |
| E5 ,6 | | | J11-0808-05 | WIRE CLAMPER | | |
| L1 -4 | | | L92-0044-05 | FERRITE CORE | | |
| L6 -8 | | | L92-0044-05 | FERRITE CORE | | |
| L101 | | | L40-1091-17 | SMALL FIXED INDUCTOR(1UH) | KPYTEQ | |
| L102 | | | L40-1001-17 | SMALL FIXED INDUCTOR(10UH,K) | KPYTEQ | |
| X101 | | * | L77-2200-05 | CRYSTAL RESONATOR(4.332MHZ) | KPYTEQ | |
| R27 ,28 | | * | RS14KB3D471JFR | FL-PROOF RS 470 J 2W | | |
| ⚠ R152 | | | RD14NB2E103J | RD 10K J 1/4W | | |
| R153,154 | | | RD14NB2E221J | RD 220 J 1/4W | | |
| R319-322 | | | RD14NB2E271J | RD 270 J 1/4W | | |
| R323,324 | | | RD14NB2E181J | RD 180 J 1/4W | | |

**L** : Scandinavia **K** : USA **P** : Canada **R** : Mexico
**Y** : PX(Far East, Hawaii) **T** : Europe **E** : Europe **G** : Germany
**Y** : AAFES(Europe) **X** : Australia **M** : Other Areas **Q** : Russia
⚠ indicates safety critical components.

# KR-V999D/1090VR
## PARTS LIST

∗ New Parts
Parts without **Parts No.** are not supplied.
Les articles non mentionnes dans le **Parts No.** ne sont pas fournis.
Teile ohne **Parts No.** werden nicht geliefert.

25

| Ref. No | Add-ress | New Parts | Parts No. | Description | Desti-nation | Re-marks |
|---|---|---|---|---|---|---|
| R369-372 | | | RD14NB2E271J | RD 270 J 1/4W | | |
| R373,374 | | | RD14NB2E181J | RD 180 J 1/4W | | |
| R410,411 | | | RD14NB2E271J | RD 270 J 1/4W | | |
| R412 | | | RD14NB2E181J | RD 180 J 1/4W | | |
| ⚠ R465,466 | | | RD14NB2E471J | RD 470 J 1/4W | | |
| R478 | | | RD14NB2E332J | RD 3.3K J 1/4W | | |
| R479 | | | RD14NB2E472J | RD 4.7K J 1/4W | | |
| R480 | | | RD14NB2E391J | RD 390 J 1/4W | | |
| VR1 ,2 | | | R31-0063-05 | VARIABLE RESISTOR | | |
| K301,302 | | | S76-0028-05 | MAGNETIC RELAY | | |
| S1 -10 | | | S70-0031-05 | TACT SWITCH | | |
| S11 | | | S70-0031-05 | TACT SWITCH | KPYTEQ | |
| S12 -19 | | | S70-0031-05 | TACT SWITCH | | |
| S20 | | | S70-0031-05 | TACT SWITCH | KPYTEQ | |
| S21 -28 | | | S70-0031-05 | TACT SWITCH | | |
| S29 | | | S70-0031-05 | TACT SWITCH | KPYTEQ | |
| S30 -33 | | | S70-0031-05 | TACT SWITCH | | |
| S201 | | | S62-0034-05 | SLIDE SWITCH | | |
| S34 | | | T99-0559-05 | ROTARY ENCODER | | |
| S35 | | | T99-0571-05 | ROTARY ENCODER | | |
| D1 -4 | | | HSS104 | DIODE | | |
| D1 -4 | | | 1SS133 | DIODE | | |
| D101 | | | HSS104A | DIODE | | |
| D101 | | | 1SS131 | DIODE | | |
| D102 | | | HSS104 | DIODE | KPYTEQ | |
| D102 | | | 1SS133 | DIODE | KPYTEQ | |
| D103 | | | HSS104A | DIODE | | |
| D103 | | | 1SS131 | DIODE | | |
| D107,108 | | | HSS104 | DIODE | | |
| D107,108 | | | 1SS133 | DIODE | | |
| D109 | | | HSS104 | DIODE | KPYTEQ | |
| D109 | | | 1SS133 | DIODE | KPYTEQ | |
| D110-115 | | | HSS104 | DIODE | | |
| D110-115 | | | 1SS133 | DIODE | | |
| D151,152 | | | HZS3.3N(B2) | ZENER DIODE | | |
| D151,152 | | | RD3.3ES(B2) | ZENER DIODE | | |
| D153 | | | HZS11N(B2) | ZENER DIODE | | |
| D153 | | | RD11ES(B2) | ZENER DIODE | | |
| D201,202 | | | HSS104 | DIODE | | |
| D201,202 | | | 1SS133 | DIODE | | |
| D205,206 | | | HSS104 | DIODE | | |
| D205,206 | | | 1SS133 | DIODE | | |
| D301-304 | | | HSS104 | DIODE | | |
| D301-304 | | | 1SS133 | DIODE | | |
| D351-354 | | | HSS104 | DIODE | | |
| D351-354 | | | 1SS133 | DIODE | | |
| D401,402 | | | HSS104 | DIODE | | |
| D401,402 | | | 1SS133 | DIODE | | |
| D451,452 | | | HZS24N(B) | ZENER DIODE | | |
| D451,452 | | | RD24ES(B) | ZENER DIODE | | |
| D453-457 | | | HSS104 | DIODE | | |
| D453-457 | | | 1SS133 | DIODE | | |
| D458 | | | HZS5.1S(B2) | ZENER DIODE | | |
| D458 | | | RD5.1JS(B2) | ZENER DIODE | | |

**L** : Scandinavia **K** : USA **P** : Canada **R** : Mexico
**Y** : PX(Far East, Hawaii) **T** : Europe **E** : Europe **G** : Germany
**Y** : AAFES(Europe) **X** : Australia **M** : Other Areas **Q** : Russia
⚠ indicates safety critical components.

∗ New Parts
Parts without **Parts No.** are not supplied.
Les articles non mentionnes dans le **Parts No.** ne sont pas fournis
Teile ohne **Parts No.** werden nicht geliefert.

26

| Ref. No | Add-ress | New Parts | Parts No. | Description | Desti-nation | Re-marks |
|---|---|---|---|---|---|---|
| D471,472 | | | HSS104A | DIODE | | |
| D471,472 | | | 1SS131 | DIODE | | |
| D473 | | | HZS18N(B2) | ZENER DIODE | | |
| D473 | | | RD18ES(B2) | ZENER DIODE | | |
| D474 | | | HZS16N(B2) | ZENER DIODE | KPYCM | |
| D474 | | | HZS8.2N(B2) | ZENER DIODE | TEQ | |
| D474 | | | RD16ES(B2) | ZENER DIODE | KPYCM | |
| D474 | | | RD8.2ES(B2) | ZENER DIODE | TEQ | |
| D475 | | | HSS104 | DIODE | | |
| D475 | | | 1SS133 | DIODE | | |
| D476 | | | HSS104A | DIODE | KPYCM | |
| D476 | | | 1SS131 | DIODE | KPYCM | |
| D477,478 | | | HSS104A | DIODE | | |
| D477,478 | | | 1SS131 | DIODE | | |
| D479 | | | HZS11N(B2) | ZENER DIODE | | |
| D479 | | | RD11ES(B2) | ZENER DIODE | | |
| ED1 | | ∗ | 11-MT-110GK | INDICATOR TUBE | | |
| IC1 | | | NJM4565L-D | ANALOGUE IC | | |
| IC2 | | | NJM4565D-D | IC(OP AMP X2) | | |
| IC101 | | | UPD16311 | MOS-IC | | |
| IC102 | | | SAA6579 | ANALOGUE IC | KPYTEQ | |
| IC201,202 | | ∗ | SN761200N | ANALOGUE IC | | |
| IC203,204 | | | TC74HC4053AP | IC(ANALOG MULTIPLEXER) | | |
| IC205,206 | | | MC14577CP | ANALOGUE IC | | |
| IC301 | | | NJM4565D-D | IC(OP AMP X2) | | |
| Q1 ,2 | | | 2SC2458(Y,GR) | TRANSISTOR | | |
| Q1 ,2 | | | 2SC3311A(Q,R) | TRANSISTOR | | |
| Q101,102 | | | 2SC2458(Y,GR) | TRANSISTOR | | |
| Q101,102 | | | 2SC3311A(Q,R) | TRANSISTOR | | |
| ⚠ Q151 | | | 2SA1534A(R,S) | TRANSISTOR | | |
| Q152 | | | 2SA1048(Y,GR) | TRANSISTOR | | |
| Q152 | | | 2SA1309A(Q,R) | TRANSISTOR | | |
| Q201,202 | | | 2SC2878(B) | TRANSISTOR | | |
| Q204 | | | DTA113ZSA | DIGITAL TRANSISTOR | | |
| Q204 | | | UN4119 | DIGITAL TRANSISTOR | | |
| Q205 | | | DTC113ZSA | DIGITAL TRANSISTOR | | |
| Q205 | | | UN4219 | DIGITAL TRANSISTOR | | |
| Q206 | | | DTA113ZSA | DIGITAL TRANSISTOR | | |
| Q206 | | | UN4119 | DIGITAL TRANSISTOR | | |
| Q207-210 | | | 2SC2003(L,K) | TRANSISTOR | | |
| Q301-304 | | | 2SA992(F,E) | TRANSISTOR | | |
| Q305-308 | | | 2SC2631(R,S) | TRANSISTOR | | |
| Q309,310 | | | 2SA1123(R,S) | TRANSISTOR | | |
| Q311,312 | | | 2SA1048(Y,GR) | TRANSISTOR | | |
| Q311,312 | | | 2SA1309A(Q,R) | TRANSISTOR | | |
| Q351-354 | | | 2SA992(F,E) | TRANSISTOR | | |
| Q355-358 | | | 2SC2631(R,S) | TRANSISTOR | | |
| Q359,360 | | | 2SA1123(R,S) | TRANSISTOR | | |
| Q361,362 | | | 2SA1048(Y,GR) | TRANSISTOR | | |
| Q361,362 | | | 2SA1309A(Q,R) | TRANSISTOR | | |
| Q401,402 | | | 2SA992(F,E) | TRANSISTOR | | |
| Q403,404 | | | 2SC2631(R,S) | TRANSISTOR | | |
| Q405 | | | 2SA1123(R,S) | TRANSISTOR | | |
| Q406 | | | 2SA1048(Y,GR) | TRANSISTOR | | |
| Q406 | | | 2SA1309A(Q,R) | TRANSISTOR | | |

**L** : Scandinavia **K** : USA **P** : Canada **R** : Mexico
**Y** : PX(Far East, Hawaii) **T** : Europe **E** : Europe **G** : Germany
**Y** : AAFES(Europe) **X** : Australia **M** : Other Areas **Q** : Russia
⚠ indicates safety critical components.



KR-V999D/1090VR
PARTS LIST

∗ New Parts
Parts without **Parts No.** are not supplied.
Les articles non mentionnes dans le **Parts No.** ne sont pas fournis.
Teile ohne **Parts No.** werden nicht geliefert.

27

| Ref. No | Add-ress | New Parts | Parts No. | Description | Desti-nation | Re-marks |
|---|---|---|---|---|---|---|
| Q451,452 | | | DTC113ZSA | DIGITAL TRANSISTOR | | |
| Q451,452 | | | UN4219 | DIGITAL TRANSISTOR | | |
| Q471 | | | 2SA1048(Y,GR) | TRANSISTOR | | |
| Q471 | | | 2SA1309A(Q,R) | TRANSISTOR | | |
| Q472 | | | DTC124ESA | DIGITAL TRANSISTOR | | |
| Q472 | | | UN4212 | DIGITAL TRANSISTOR | | |
| ⚠ Q475 | | | 2SC1845(F,E) | TRANSISTOR | | |
| ⚠ Q476 | | | 2SA1535(R,S) | TRANSISTOR | | |
| A1 | | | W02-2561-05 | ELECTRIC CIRCUIT MODULE | | |
| **SWITCH UNIT (X25-588X-XX)** | | | | | | |
| C1 ,2 | | ∗ | CC45FSL1H151JN | CERAMIC 150PF J | | |
| C3 ,4 | | | CE04KW1H100M | ELECTRO 10UF 50WV | | |
| C5 ,6 | | | CQ93FMG1H393J | MYLAR 0.039UF J | | |
| C7 ,8 | | | CQ93FMG1H113J | MYLAR 0.011UF J | | |
| C9 ,10 | | | CE04EW0J102M | ELECTRO 1000UF 6.3WV | | |
| C11 ,12 | | | CQ93FMG1H182J | MYLAR 1800PF J | | |
| C13 -16 | | | CQ93FMG1H102J | MYLAR 1000PF J | | |
| C17 ,18 | | | CE04KW1E470M | ELECTRO 47UF 25WV | | |
| C19 ,20 | | ∗ | CK45FB1H471KMM | CERAMIC 470PF K | | |
| C21 | | | CF92FV1H104J | MF-C 0.10UF J | | |
| C22 | | | CQ93FMG1H102J | MYLAR 1000PF J | | |
| C31 -40 | | | CC45FSL1H151JN | CERAMIC 150PF J | | |
| C51 ,52 | | | CE04KW1H100M | ELECTRO 10UF 50WV | | |
| C53 ,54 | | ∗ | CC45FSL1H470JN | CERAMIC 47PF J | | |
| C55 ,56 | | | CE04KW1E470M | ELECTRO 47UF 25WV | | |
| C57 | | | CQ93FMG1H103J | MYLAR 0.010UF J | | |
| C58 | | | CQ93FMG1H102J | MYLAR 1000PF J | | |
| C71 ,72 | | | CE04KW1H2R2M | ELECTRO 2.2UF 50WV | | |
| C75 ,76 | | ∗ | CC45FSL1H470JN | CERAMIC 47PF J | | |
| C77 | | | CQ93FMG1H103J | MYLAR 0.010UF J | | |
| C78 | | | CQ93FMG1H102J | MYLAR 1000PF J | | |
| C101,102 | | | CE04KW1H2R2M | ELECTRO 2.2UF 50WV | | |
| C103,104 | | ∗ | CC45FSL1H470JN | CERAMIC 47PF J | | |
| C105,106 | | | CE04KW1H2R2M | ELECTRO 2.2UF 50WV | | |
| C107,108 | | | CC45FSL1H470JN | CERAMIC 47PF J | | |
| C109,110 | | | CE04KW1H2R2M | ELECTRO 2.2UF 50WV | | |
| C111,112 | | ∗ | CC45FSL1H470JN | CERAMIC 47PF J | | |
| C113-118 | | | CE04KW1H4R7M | ELECTRO 4.7UF 50WV | | |
| C119 | | | CQ93FMG1H103J | MYLAR 0.010UF J | | |
| C120 | | | CQ93FMG1H102J | MYLAR 1000PF J | | |
| C122 | | | CQ93FMG1H102J | MYLAR 1000PF J | | |
| C123 | | | CQ93FMG1H103J | MYLAR 0.010UF J | | |
| C124 | | | CQ93FMG1H102J | MYLAR 1000PF J | | |
| C125-130 | | ∗ | CC45FSL1H101JN | CERAMIC 100PF J | MYCTEQ | |
| C141 | | | CQ93FMG1H103J | MYLAR 0.010UF J | | |
| C142 | | | CQ93FMG1H151K | MYLAR 150PF K | | |
| C143 | | | CQ93FMG1H103J | MYLAR 0.010UF J | | |
| C144 | | | CQ93FMG1H151K | MYLAR 150PF K | | |
| C145 | | | CQ93FMG1H103J | MYLAR 0.010UF J | | |
| C146 | | | CQ93FMG1H151K | MYLAR 150PF K | | |
| C147-149 | | ∗ | CK45FB1H471KMM | CERAMIC 470PF K | | |
| C150 | | | CE04HW1H100M | NP-ELEC 10UF 50WV | | |
| C171-176 | | | CE04KW1H4R7M | ELECTRO 4.7UF 50WV | | |
| C177-182 | | ∗ | CC45FSL1H151JN | CERAMIC 150PF J | | |

**L** : Scandinavia **K** : USA **P** : Canada **R** : Mexico
**Y** : PX(Far East, Hawaii) **T** : Europe **E** : Europe **G** : Germany
**Y** : AAFES(Europe) **X** : Australia **M** : Other Areas **Q** : Russia
⚠ indicates safety critical components.

∗ New Parts
Parts without **Parts No.** are not supplied.
Les articles non mentionnes dans le **Parts No.** ne sont pas fournis.
Teile ohne **Parts No.** werden nicht geliefert.

28

| Ref. No | Add-ress | New Parts | Parts No. | Description | Desti-nation | Re-marks |
|---|---|---|---|---|---|---|
| C202-208 | | ∗ | CC45FSL1H101JN | CERAMIC 100PF J | | |
| C209 | | | CE04KW1V4R7M | ELECTRO 4.7UF 35WV | | |
| C210 | | | CE04KW1C331M | ELECTRO 330UF 16WV | | |
| C211 | | | CE04KW1V4R7M | ELECTRO 4.7UF 35WV | | |
| C212 | | | CE04KW1C331M | ELECTRO 330UF 16WV | | |
| C213-215 | | | CE04KW1V4R7M | ELECTRO 4.7UF 35WV | | |
| C216 | | | CE04KW1H100M | ELECTRO 10UF 50WV | | |
| C217 | | ∗ | CC45FSL1H100DN | CERAMIC 10PF D | | |
| C218 | | | CQ93FMG1H222J | MYLAR 2200PF J | | |
| C219 | | | CE04KW1H100M | ELECTRO 10UF 50WV | | |
| C220 | | ∗ | CC45FSL1H100DN | CERAMIC 10PF D | | |
| C221 | | ∗ | CC45FSL1H221JN | CERAMIC 220PF J | | |
| C222 | | | CE04KW1H010M | ELECTRO 1.0UF 50WV | | |
| C223 | | ∗ | CK45FB1H471KMM | CERAMIC 470PF K | | |
| C224 | | | CE04KW1HR47M | ELECTRO 0.47UF 50WV | | |
| C225 | | | CQ93FMG1H223J | MYLAR 0.022UF J | | |
| C226 | | | CE04KW1H2R2M | ELECTRO 2.2UF 50WV | | |
| C227 | | ∗ | CK45FB1H332KMM | CERAMIC 3300PF K | | |
| C228 | | ∗ | CC45FSL1H221JN | CERAMIC 220PF J | | |
| C229 | | ∗ | CC45FCH1H050CN | CERAMIC 5.0PF C | | |
| C230 | | ∗ | CC45FCH1H220JN | CERAMIC 22PF J | | |
| C231 | | ∗ | CC45FSL1H270JN | CERAMIC 27PF J | | |
| C232 | | ∗ | CC45FSL1H220JN | CERAMIC 22PF J | | |
| C234 | | | CE04KW1H010M | ELECTRO 1.0UF 50WV | MYCTEQ | |
| C235 | | ∗ | CK45FB1H471KMM | CERAMIC 470PF K | MYCTEQ | |
| C236 | | | CE04KW1HR47M | ELECTRO 0.47UF 50WV | MYCTEQ | |
| C237 | | | CQ93FMG1H473J | MYLAR 0.047UF J | MYCTEQ | |
| C238 | | | CE04KW1H010M | ELECTRO 1.0UF 50WV | MYCTEQ | |
| C239 | | ∗ | CK45FF1H472ZMM | CERAMIC 4700PF Z | MYCTEQ | |
| C240 | | ∗ | CC45FSL1H221JN | CERAMIC 220PF J | MYCTEQ | |
| C241 | | ∗ | CC45FCH1H050CN | CERAMIC 5.0PF C | MYCTEQ | |
| C242 | | ∗ | CC45FCH1H220JN | CERAMIC 22PF J | MYCTEQ | |
| C243 | | ∗ | CC45FSL1H270JN | CERAMIC 27PF J | MYCTEQ | |
| C244 | | ∗ | CC45FSL1H220JN | CERAMIC 22PF J | MYCTEQ | |
| C245 | | ∗ | CK45FB1H152KMM | CERAMIC 1500PF K | MYCTEQ | |
| C246 | | | CE04KW1V4R7M | ELECTRO 4.7UF 35WV | MYCTEQ | |
| C247 | | | CE04KW1H100M | ELECTRO 10UF 50WV | MYCTEQ | |
| C248 | | | CQ93FMG1H153J | MYLAR 0.015UF J | MYCTEQ | |
| C249 | | | CQ93FMG1H683J | MYLAR 0.068UF J | MYCTEQ | |
| C250-252 | | ∗ | CC45FSL1H100DN | CERAMIC 10PF D | | |
| C253 | | | CE04HW1E100M | NP-ELEC 10UF 25WV | | |
| C254-256 | | | CE04KW1H100M | ELECTRO 10UF 50WV | | |
| C257,258 | | ∗ | CC45FSL1H220JN | CERAMIC 22PF J | | |
| C301,302 | | ∗ | CK45FF1H103ZMM | CERAMIC 0.010UF Z | | |
| C303 | | | CE04KW1H100M | ELECTRO 10UF 50WV | | |
| C304 | | ∗ | CK45FF1H103ZMM | CERAMIC 0.010UF Z | | |
| C305 | | | CE04KW1H100M | ELECTRO 10UF 50WV | | |
| C306 | | ∗ | CK45FF1H103ZMM | CERAMIC 0.010UF Z | | |
| C307-309 | | ∗ | CC45FSL1H101JN | CERAMIC 100PF J | | |
| C310 | | | CE04KW1H100M | ELECTRO 10UF 50WV | | |
| C311 | | ∗ | CK45FF1H103ZMM | CERAMIC 0.010UF Z | | |
| C312 | | | CE04KW1H100M | ELECTRO 10UF 50WV | MYCTEQ | |
| C313 | | ∗ | CK45FF1H103ZMM | CERAMIC 0.010UF Z | MYCTEQ | |
| C314 | | | CE04KW1H100M | ELECTRO 10UF 50WV | MYCTEQ | |
| C315,316 | | ∗ | CK45FF1H103ZMM | CERAMIC 0.010UF Z | MYCTEQ | |

**L** : Scandinavia **K** : USA **P** : Canada **R** : Mexico
**Y** : PX(Far East, Hawaii) **T** : Europe **E** : Europe **G** : Germany
**Y** : AAFES(Europe) **X** : Australia **M** : Other Areas **Q** : Russia
⚠ indicates safety critical components.

# KR-V999D/1090VR

## SPECIFICATIONS

***GENERAL***

Power consumption .....4 A
AC outlet
SWITCHED.....2 (total 90 W, 0.75 A max.)
Dimensions.....W : 440 mm (17-5/16")
H : 162 mm (6-3/8")
D : 392 mm (15-7/16")
Weight (Net).....13 kg (28.7 lb)

***RF Demodulator (DEM-999D)*** (only KR-V999D C,M,T type)

Input level
AC-3 RF.....50 mV p-p ~ 200 mV p-p
RF Frequency responce .....2.88 MHz ~ ±144 kHz
Output level / Impedance
Coaxial.....0.5 Vp-p / 75 Ω
Dimensions.....W : 89 mm
H : 35 mm
D : 101 mm
Weight (Net).....200 g

KENWOOD follows a policy of continuous advancements in development. For this reason specifications may be changed without notice.

# CIRCUIT DESCRIPTION

## 3. TUNER PRESET MEMORY FREQUENCY(INITIALIZE)

| Channel | BAND | K1 TYPE | BAND | K2 TYPE | BAND | E1/E3 TYPE | BAND | Q TYPE |
|---|---|---|---|---|---|---|---|---|
| 01ch | FM | 87.50MHz | FM | 87.50MHz | FM | 87.50MHz | FM | 87.50MHz |
| 02ch | FM | 98.00MHz | FM | 98.00MHz | FM | 98.00MHz | FM | 98.00MHz |
| 03ch | FM | 108.00MHz | FM | 108.00MHz | FM | 108.00MHZ | FM | 108.00MHZ |
| 04ch | AM | 630kHz | AM | 630kHz | AM | 630kHz | AM | 630kHz |
| 05ch | AM | 1000kHz | AM | 1000kHz | AM | 999kHz | AM | 999kHz |
| 06ch | AM | 1440kHz | AM | 1440kHz | AM | 1440kHz | AM | 1440kHz |
| 07ch | FM | 87.50MHz | FM | 87.50MHz | FM | 87.50MHz | FML | 74.00MHz |
| 08ch | FM | 87.50MHz | FM | 87.50MHz | FM | 87.50MHz | FML | 65.00MHz |
| 09ch | FM | 87.50MHz | FM | 87.50MHz | FM | 87.50MHz | FML | 69.00MHz |
| 10ch | FM | 89.10MHz | FM | 89.10MHz | FM | 89.10MHz | FM | 89.10MHz |
| 11ch | FM | 90.00MHz | FM | 90.00MHz | FM | 90.00MHz | FM | 90.00MHz |
| 12ch | FM | 97.50MHz | FM | 97.50MHz | FM | 97.50MHz | FM | 97.50MHz |
| 13ch | FM | 98.50MHz | FM | 98.50MHz | FM | 98.50MHz | FM | 98.50MHz |
| 14ch | FM | 106.00MHz | FM | 106.00MHz | FM | 106.00MHz | FM | 106.00MHz |
| 15ch | AM | 530kHz | AM | 530kHz | AM | 531kHz | AM | 531kHz |
| 16ch | AM | 990kHz | AM | 990kHz | AM | 990kHz | AM | 990kHz |
| 17ch | AM | 1700kHz | AM | 1610kHz | AM | 1602kHz | AM | 1602kHz |
| 18ch | FM | 87.50MHz | FM | 87.50MHz | FM | 87.50MHz | FM | 87.50MHz |
| 19ch | FM | 87.50MHz | FM | 87.50MHZ | FM | 87.50MHz | FM | 87.50MHz |
| 20ch | FM | 87.50MHz | FM | 87.50MHz | FM | 87.50MHz | FM | 87.50MHz |
| 21~40ch | FM | 76.00MHz | FM | 87.50MHz | FM | 87.50MHz | FM | 87.50MHz |

The initial setting is performed in a following event :

1. When backup memory data is destroyed when reset is applied to the microprocessor.
2. When the power cord is plugged in to the AC wall outlet while pressing the POWER key.

## 4. Condition by the destination or model

| Type | BAND | Reception frequency | Channel space | IF | PLL standard frequency | Destination switch | | | | |
|---|---|---|---|---|---|---|---|---|---|---|
| | | | | | | 4 (65) | 3 (62) | (26) | (25) | (24) |
| K1(1700) (RBDS) | FM | 87.5MHz - 108.0MHz | 100kHz | +10.7MHz | 50kHz | 0 | 0 | 1 | 0 | 0 |
| | AM | 530kHz - 1700kHz | 10kHz | +450kHz | 10kHz | | | | | |
| K2 (1610) | FM | 87.5MHz - 108.0MHz | 100kHz | +10.7MHz | 50kHz | 0 | 1 | 0 | 1 | 0 |
| | AM | 530kHz - 1610kHz | 10kHz | +450kHz | 10kHz | | | | | |
| K3(1610) (RBDS) | FM | 87.5MHz - 108.0MHz | 100kHz | +10.7MHz | 50kHz | 1 | 0 | 0 | 1 | 0 |
| | AM | 530kHz - 1610kHz | 10kHz | +450kHz | 10kHz | | | | | |
| E1 | FM | 87.5MHz - 108.0MHz | 50kHz | +10.7MHz | 50kHz | 0 or 1 | 0 or 1 | 0 | 1 | 0 |
| | AM | 531kHz - 1602kHz | 9kHz | +450kHz | 9kHz | | | | | |
| E2 (RDS) | FM | 87.5MHz - 108.0MHz | 50kHz | +10.7MHz | 50kHz | 0 | 0 | 1 | 1 | 0 |
| | AM | 531kHz - 1602kHz | 9kHz | +450kHz | 9kHz | | | | | |
| M | K2/E1 is switched with only the setting of TSW3. | | | | | 0 | X | 0 | 1 | 0 |
| | (TSW3=1: K2 type, 0: E1 type) | | | | | | | | | |
| Y | K3/E1 is switched with only the setting of TSW3. | | | | | 1 | X | 0 | 1 | 0 |
| | (TSW3=1: E1 type, 0: K3 type) | | | | | | | | | |
| Q (RDS) | FM L | 65.0MHz - 74.0MHz | 10kHz | +10.7MHz | 5kHz | * | * | * | * | * |
| | FM H | 87.5MHz - 108.0MHz | 50kHz | +10.7MHz | 5kHz | | | | | |
| | AM | 531kHz - 1602kHz | 9kHz | +450kHz | 9kHz | | | | | |

※ The number inside ○ is a terminal number of a main microprocessor.

# CIRCUIT DESCRIPTION

## 5. Test mode

(1) Test mode setting method

Turn on the power supply while pressing TUNING-DOWN key, to make a set in test mode condition.

When a set is set up in test mode condition a set becomes the following condition.

Automatic POWER ON

All indicator tubes and also LED are lighted. (This condition can be canceled by pressing the key of the set.)

A backup at the thing except ON/OFF of POWER is initialized.

(2) Test mode cancellation method

The power supply is turned off.

(3) A tuner function.

When a selector is set to the tuner, the following key is not usual function and operates by the special function.

The function to summon the channel of the presetting

① The following channel is summoned when not operating +10 keys.
1ch ~ 9ch (1 ~ 9key)
10ch (0key)

② When +10 keys are pressed once, the following channel is summoned.
11ch ~ 19ch (1 ~ 9key)
20ch (0key)

③ When +10 keys are pressed twice, the following channel is summoned.
21ch ~ 29ch (1 ~ 9key)
30ch (0key)

④ When +10 keys are pressed three times, the following channel is summoned.
31ch ~ 39ch (1 ~ 9key)
40ch (0key)

⑤ When +10 keys are pressed four times, it gets to do the function which is the same as the condition which doesn't press +10 keys.

- The S level hexadecimal DATA display and the ATT ON/OFF function
  When a selector is set to the tuner, it repeats the following operation cyclically when operating the PTY key of the set.
  a) When ATT is in the OFF condition, it displays as follows.
  "ATT OFF display" + "Signal level display by the tuner (HEX DATA)"
  b) When ATT is in the ON condition, it displays as follows.
  "ATT ON display" + "Signal level display by the tuner (HEX DATA)"
  c) At the time of the ATT OFF condition, the set becomes usual display.

☆ When the key of a set is pressed a signal level display of a tuner continues to display the value of when that ATT works.

- The display changes by pressing TA•INFO•NEWS key, RDS DISPLAY key and TP key irrespective of the condition of AUTO-MEMORY.

☆ When it is inputting RDS signal the work of TP key is not able to be confirmed.
(TP display has changed by RDS signal.)

- MUTE signal output
  Because TUNER-MUTE always becomes OFF condition, it isn't possible to do control.
- RDS display mode.
  RDS-PS display works by pressing PRO-LOGIC key irrespective of TUNED. Then, "SURROUND" of an indicator tube is lighted. (It is able to cancel it by pressing PRO-LOGIC key.)
- By pressing MEMORY key, it is possible to do the work of all the lighting-up / usual lighting-up cyclically.

(4) An amplifier function.

- The value in the first of the speaker setting by the test mode is full equipment.
- When a selector is set to the thing except TUNER, the following key works by the special function.
  When a selector is set to TUNER, the following key does usual work.

① It is possible to set as follows by operating with the rotary encoder and the stoat key when a selector is set to the thing except TUNER.

| Setting item | Ten-key that operates | Master volume |
|---|---|---|
| Maximum | 2 | 0dB |
| Middle | 3 | -30dB |
| Minimum | 1 | -98dB |

② The following work is done by operating a ten-key, when a selector is set up other than TUNER.

| Condition which displayed | Ten-key that operates | |
|---|---|---|
| The setting initial state is a master volume. | | |
| INPUT LEVEL (IL) | 4 | After pressing the ten-key which was written on the left, press "1" "2" or "3" of the ten-key. |
| SPEAKER DELAY TIME (DL) | 5 | |
| SPEAKER LEVEL FRONT L (L) | 6 | |
| SPEAKER LEVEL FRONT R (R) | 7 | |
| SPEAKER LEVEL CENTER (C) | 8 | |
| SPEAKER LEVEL REAR L (SL) | 9 | |
| SPEAKER LEVEL FRONT R (SR) | 0 | |
| SPEAKER LEVEL WOOFER (SW) | +10 | |

③ Test tone operation

While displaying as follows every time it presses DIRECT key when dolby surround is working, it switches a speaker and TEST-TONE is output.

By pressing STEREO key, this work and dolby surround can be canceled.

Lch → Cch → Rch → RSch → LSch → SWch

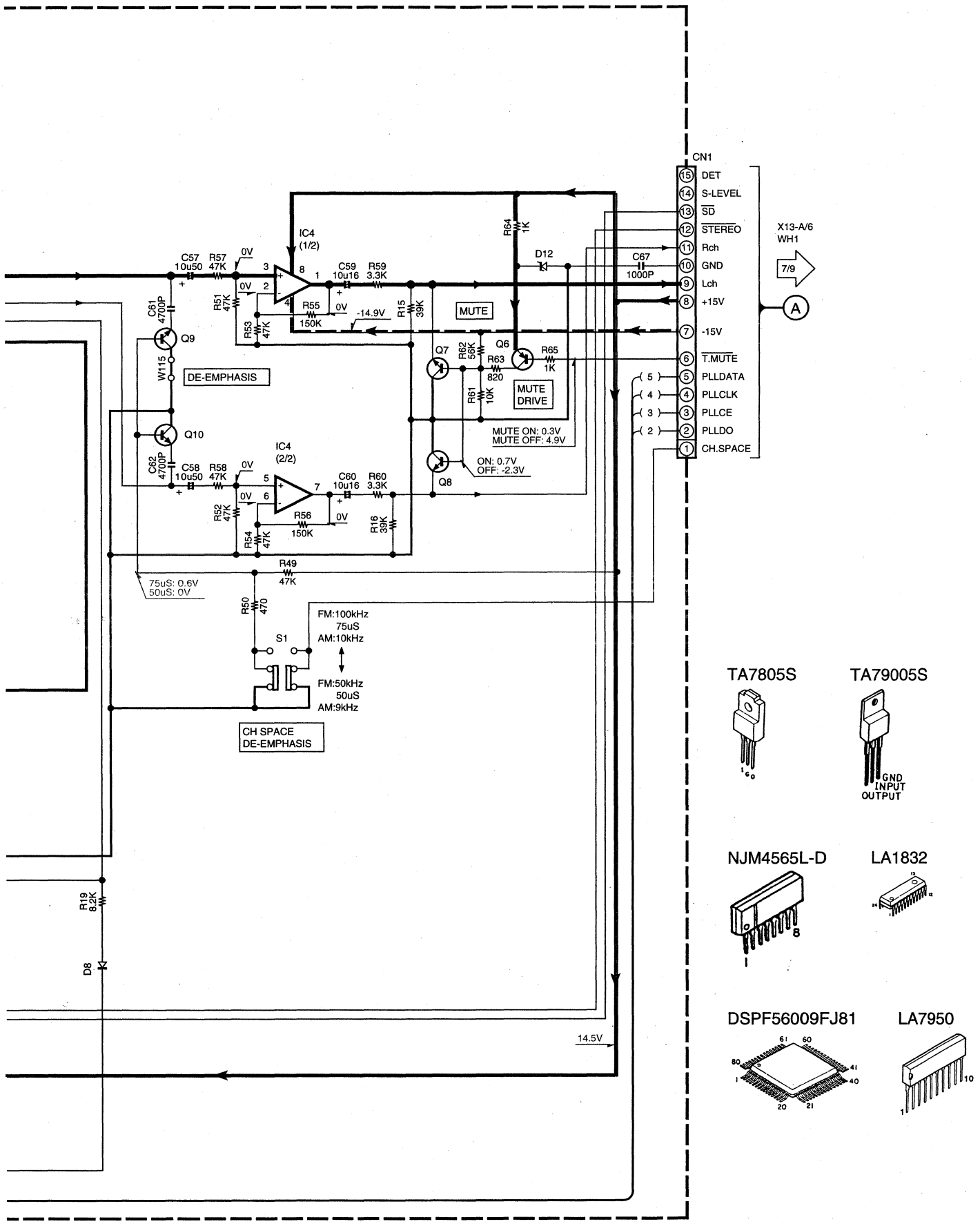


KR-V999D,1090VR(C) (1/9)

# KR-V999D/1090VR

Y05-3300-10

KENWOOD

(X05-468X-XX) (K,P,T,E,Q,Y) TYPE

*The DC voltage is an actual reading measured with a high impedance type voltmeter as the AM/FM signal generator is specified to the conditions as shown in the list below. The measurement value may vary depending on the measuring instruments used or on the product. The value shown in ( ) is actual reading measured in the AM mode.*

| MODE | CARRIER | MODULATION | | ANT INPUT |
|---|---|---|---|---|
| | | FREQUENCY | DEVIATION | |
| FM | 98MHz | 1kHz | STEREO 67.5kHz 7.5kHz(Pilot) | 60dB |
| AM | 1000(999)kHz | 400Hz | MONO 30% MOD | 60dB |

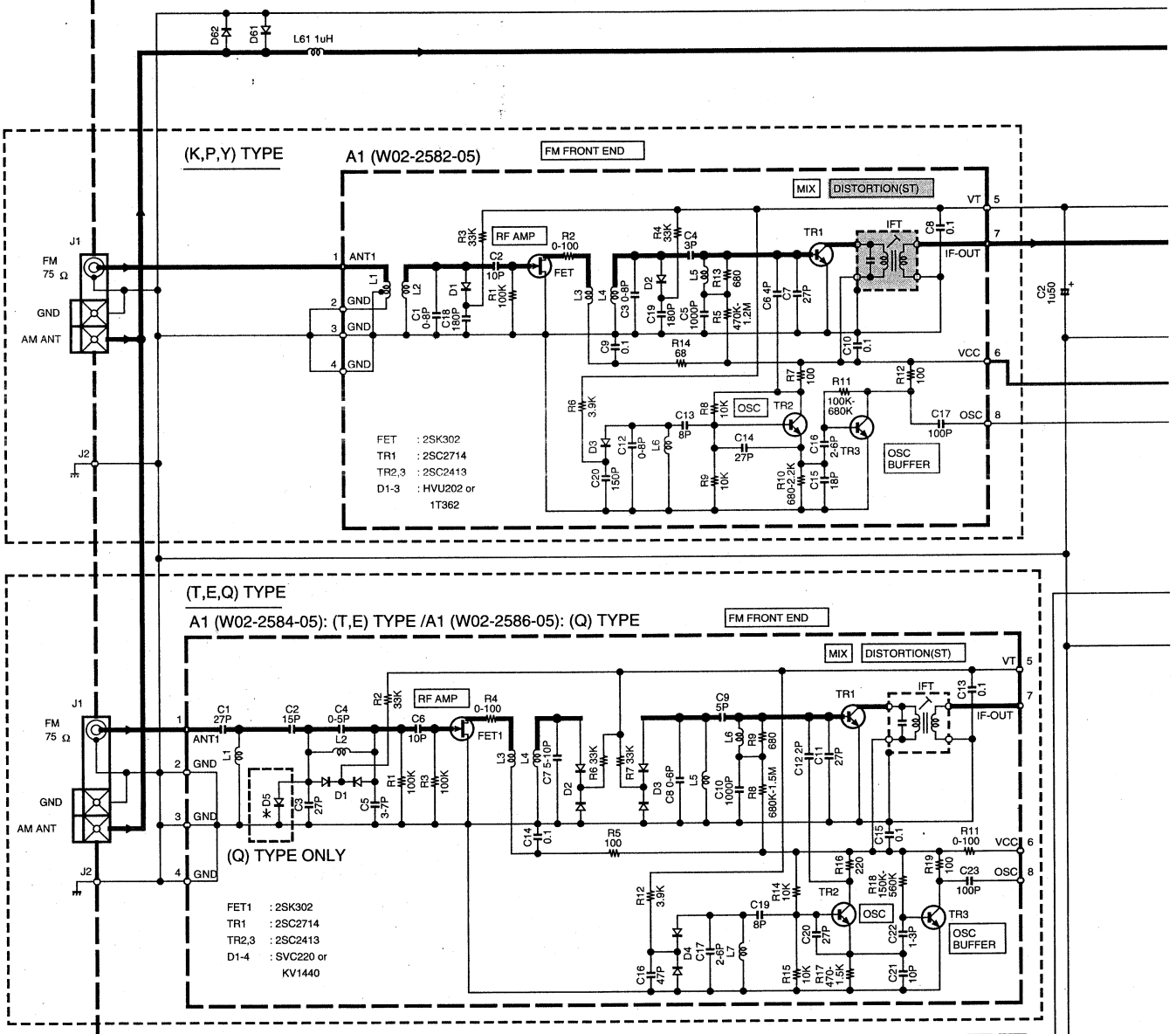


| | |
|---|---|
| IC1 | : LA1836 |
| IC2 | : LC72131 |
| Q1,2,4,31-34 | : 2SC4081(R,S) or 2SC4116(Y,GR) |
| Q3,81,103 | : 2SA1576A(R,S) or 2SA1586(Y,GR) |
| Q101,102 | : 2SD1757K |
| D1,2,32,61,62 | : 1SS133 or HSS104 |
| D31 | : RD8.2ES(B2) or HZS8.2N(B2) |
| D81 | : RD5.1ES(B2) or HZS5.1(B2) |
| D101 | : RD3.3ES(B2) or HZS3.3N(B2) |
| D102 | : RD2.7ES(B2) or HZS2.7N(B2) |

VT VOLTAGE

| BAND | FREQ. | VT |
|---|---|---|
| FM | LF | 1.6V |
| | HF | 7.8V |
| AM | LF | 1.3V |
| | HF | 5.0V |

LF: LOWEST FREQUENCY
HF: HIGHEST FREQUENCY

1090VR (X05-468X-XX)

| DESTINATION | | UNIT No. | Ⓐ | R3 | R16, 20 | C53, 54 | C71, 72 | C73 | CF1,2 | S1 | W11 | W28,29, 72 |
|---|---|---|---|---|---|---|---|---|---|---|---|---|
| COUNTRY | ABB. | | | | | | | | | | | |
| U.S.A. CANADA | K P | 0-11 | NO | 560 | 15 | 0.033 | NO | YES | L72-0596 | NO | YES | NO |

KRV-999D (X05-468X-XX)

| DESTINATION | | UNIT No. | Ⓐ | R3 | R16, 20 | C53, 54 | C71, 72 | C73 | CF1,2 | S1 | W11 | W28,29, 72 |
|---|---|---|---|---|---|---|---|---|---|---|---|---|
| COUNTRY | ABB. | | | | | | | | | | | |
| U.K. EUROPE | T E | 2-71 | YES | 1.8K | 10 | 0.022 | NO | NO | L72-0536 | NO | NO | NO |
| RUSSIA | Q | 3-81 | | | | | | | | | | |
| PX | Y | 2-91 | NO | 560 | 15 | | YES | YES | L72-0596 | YES | YES | YES |

***CAUTION:*** *For continued safety, replace safety critical components only with manufacturer's recommended parts (refer to parts list). ⚠ indicates safety critical components. For continued protection against risk of fire, replace only with same type and rating fuse(s). To reduce the risk of electric shock, leakage-current or resistance measurements shall be carried out (exposed parts are acceptably insulated from the supply circuit) before the appliance is returned to the customer.*

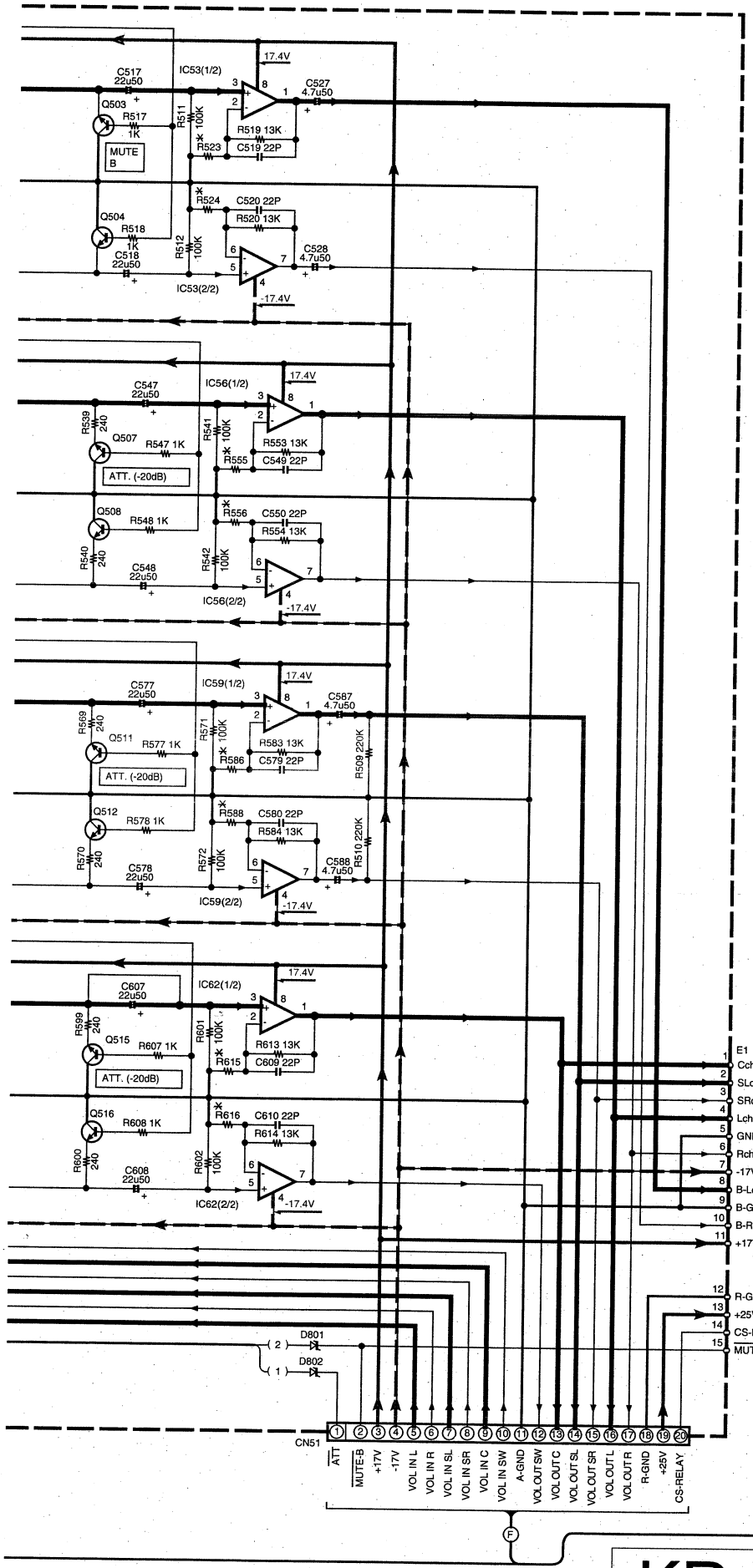


(X08-) (B/2)

| | |
|---|---|
| IC51,54,57,60 | : TC9412AP |
| IC52,53,55,56,58,59,61,62 | : NJM4580ED or NJM4580E |
| IC71,72 | : TC9163AF |
| Q501-516 | : 2SC4213(B) |
| Q517 | : UN5212 or DTC124EUA |
| Q518 | : 2SB1308(Q,R) |
| Q801-803 | : UN5219 or DTC113ZUA |
| D501,701 | : DA204K |
| D502-504,702-704 | : MA110 |
| D801-803 | : UDZ18B |

SIGNAL LINE
GND LINE
+B LINE
-B LINE

***CAUTION:*** *For continued safety, replace safety critical components only with manufacturer's recommended parts (refer to parts list). ⚠ indicates safety critical components. For continued protection against risk of fire, replace only with same type and rating fuse(s). To reduce the risk of electric shock, leakage-current or resistance measurements shall be carried out (exposed parts are acceptably insulated from the supply circuit) before the appliance is returned to the customer.*

*The DC voltage is an actual reading measured with a high impedance type voltmeter with no signal input. The measurement value may vary depending on the measuring instruments used or on the product.*

KR-V999D,1090VR(K) (4/9)

Y05-3300-10

# KR-V999D/1090VR

KENWOOD

(X14-430X-XX) (C/5)

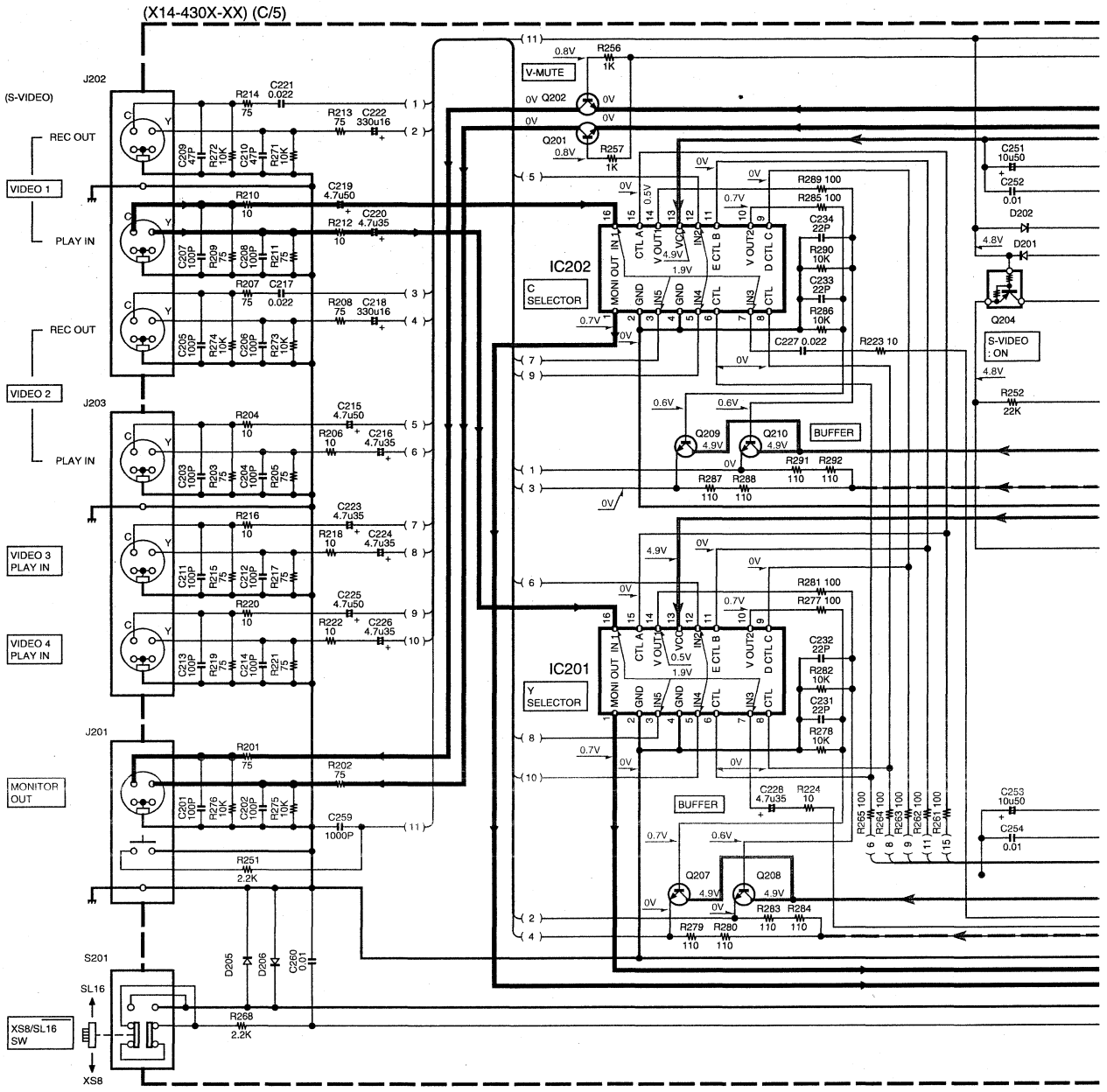


X08-B/2
-WH1
4/9
E

| | |
|---|---|
| IC201,202 | : SN76120ON |
| IC203,204 | : TC74HC4053AP |
| IC205,206 | : MC14577CP |
| IC301 | : NJM4565D-D |
| Q201,202 | : 2SC2878(B) |
| Q204,206 | : UN4119 or DTA113ZSA |
| Q205,451,452 | : UN4219 or DTC113ZSA |
| Q207-210 | : 2SC2003(L,K) |
| Q301-304,351-354,401,402 | : 2SA992(F,E) |
| Q305-308,355-358,403,404 | : 2SC2631(R,S) |
| Q309,310,359,360,405 | : 2SA1123(R,S) |
| Q311,312,361,362,406,471 | : 2SA1048(Y,GR) or 2SA1309A(Q,R) |
| Q472 | : UN4212 or DTC124ESA |
| Q475 | : 2SC1845(F,E) |
| Q476 | : 2SA1535(R,S) |

1090VR (X14-433X-XX)

| DESTINATION | | UNIT No. | D474 | D476 | R459, R460 | R473 | R476 | W94 | W266 |
|---|---|---|---|---|---|---|---|---|---|
| COUNTRY | ABB. | | | | | | | | |
| U.S.A. CANADA | K P | 0-10 | RD16ES(B2) or HZS16N(B2) | YES | NO | 47K | 33K | NO | YES |

KR-V999D (X14-433X-XX)

| DESTINATION | | UNIT No. | D474 | D476 | R459, R460 | R473 | R476 | W94 | W266 |
|---|---|---|---|---|---|---|---|---|---|
| COUNTRY | ABB. | | | | | | | | |
| GENERAL MARKET CHINA PX | M C Y | 0-21 | RD16ES(B2) or HZS16N(B2) | YES | NO | YES | 33K | NO | YES |
| U.K. EUROPE RUSSIA | T E Q | 2-71 | RD8.2ES(B2) or HZS8.2(B2) | NO | YES | NO | 62K | YES | NO |

| | |
|---|---|
| D201,202,205,206, 301-304,351-354,401,402,453-457,475 | : 1SS133 or HSS104 |
| D471,472,476-478 | : HSS104A or 1SS131 |
| D479 | : RD11ES(B2) or HZS11N(B2) |
| D451,452 | : RD24ES(B) or HZS24N(B) |
| D458 | : RD5.1JS(B2) or HZS5.1S(B2) |
| D473 | : RD18ES(B2) or HZS18N(B2) |
| D474 | : ✳ |

SIGNAL LINE
GND LINE
+B LINE
-B LINE

*The DC voltage is an actual reading measured with a high impedance type voltmeter with no signal input. The measurement value may vary depending on the measuring instruments used or on the product.*

***CAUTION:*** *For continued safety, replace safety critical components only with manufacturer's recommended parts (refer to parts list). ⚠ indicates safety critical components. For continued protection against risk of fire, replace only with same type and rating fuse(s). To reduce the risk of electric shock, leakage-current or resistance measurements shall be carried out (exposed parts are acceptably insulated from the supply circuit) before the appliance is returned to the customer.*

*The DC voltage is an actual reading measured with a high impedance type voltmeter with no signal input. The measurement value may vary depending on the measuring instruments used or on the product.*

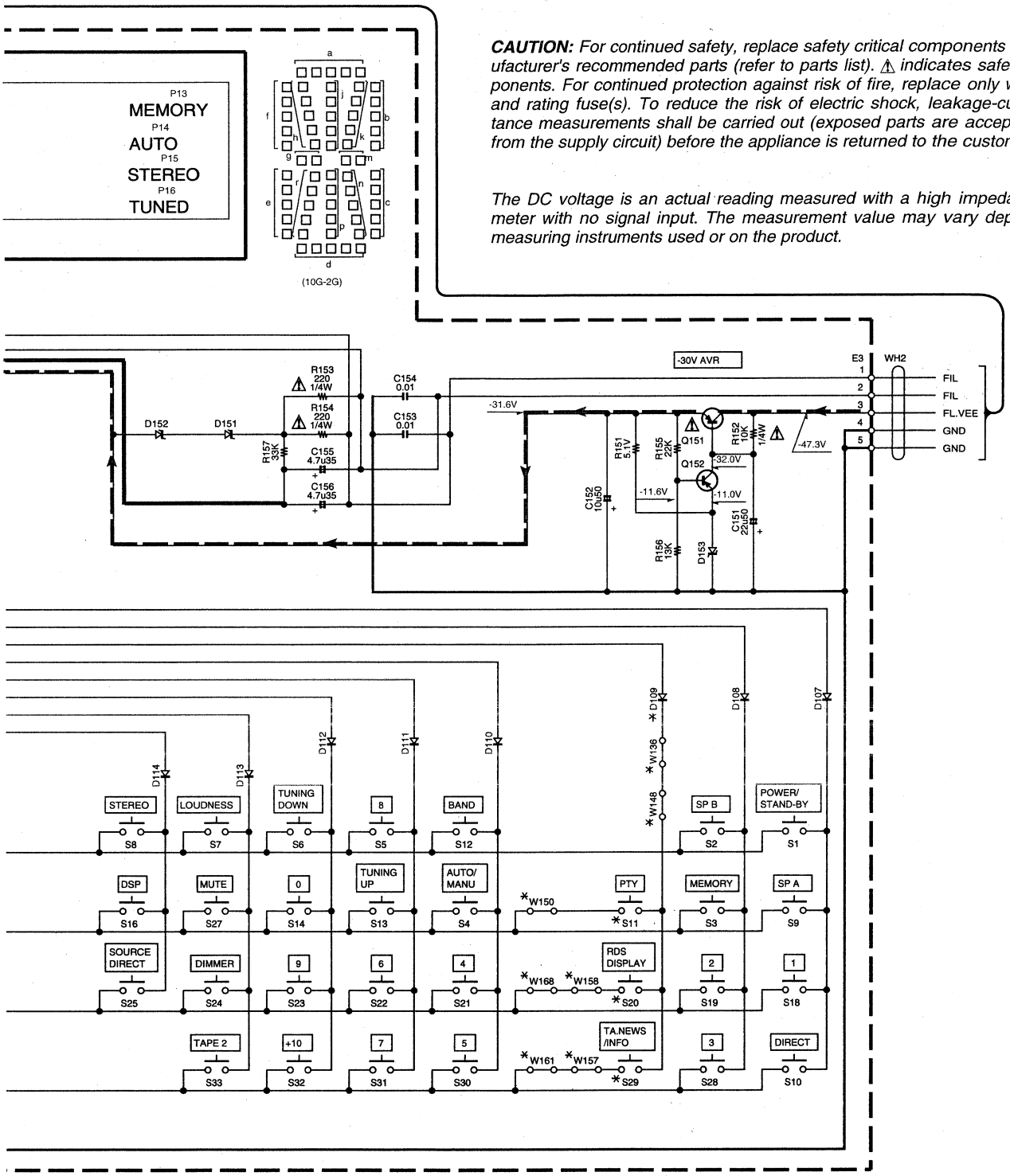


1090VR (X14-433X-XX)

| DESTINATION | | UNIT No. | Ⓐ | D109 | S11,20, 29 | W136,148,150,157, 158,161,168 |
|---|---|---|---|---|---|---|
| COUNTRY | ABB. | | | | | |
| U.S.A. CANADA | K P | 0-10 | YES | YES | YES | YES |

KR-V999D (X14-433X-XX)

| DESTINATION | | UNIT No. | Ⓐ | D109 | S11,20, 29 | W136,148,150,157, 158,161,168 |
|---|---|---|---|---|---|---|
| COUNTRY | ABB. | | | | | |
| GENERAL MARKET CHINA PX | M C Y | 0-21 | NO | NO | NO | NO |
| U.K. EUROPE RUSSIA | T E Q | 2-71 | YES | YES | YES | YES |

SIGNAL LINE
GND LINE
+B LINE
-B LINE

KR-V999D,1090VR(K) (9/9)

Y05-3300-10

# KR-V999D/1090VF

KENWOOD

# KR-V999D/1090VR

## EXPLODED VIEW (UNIT)

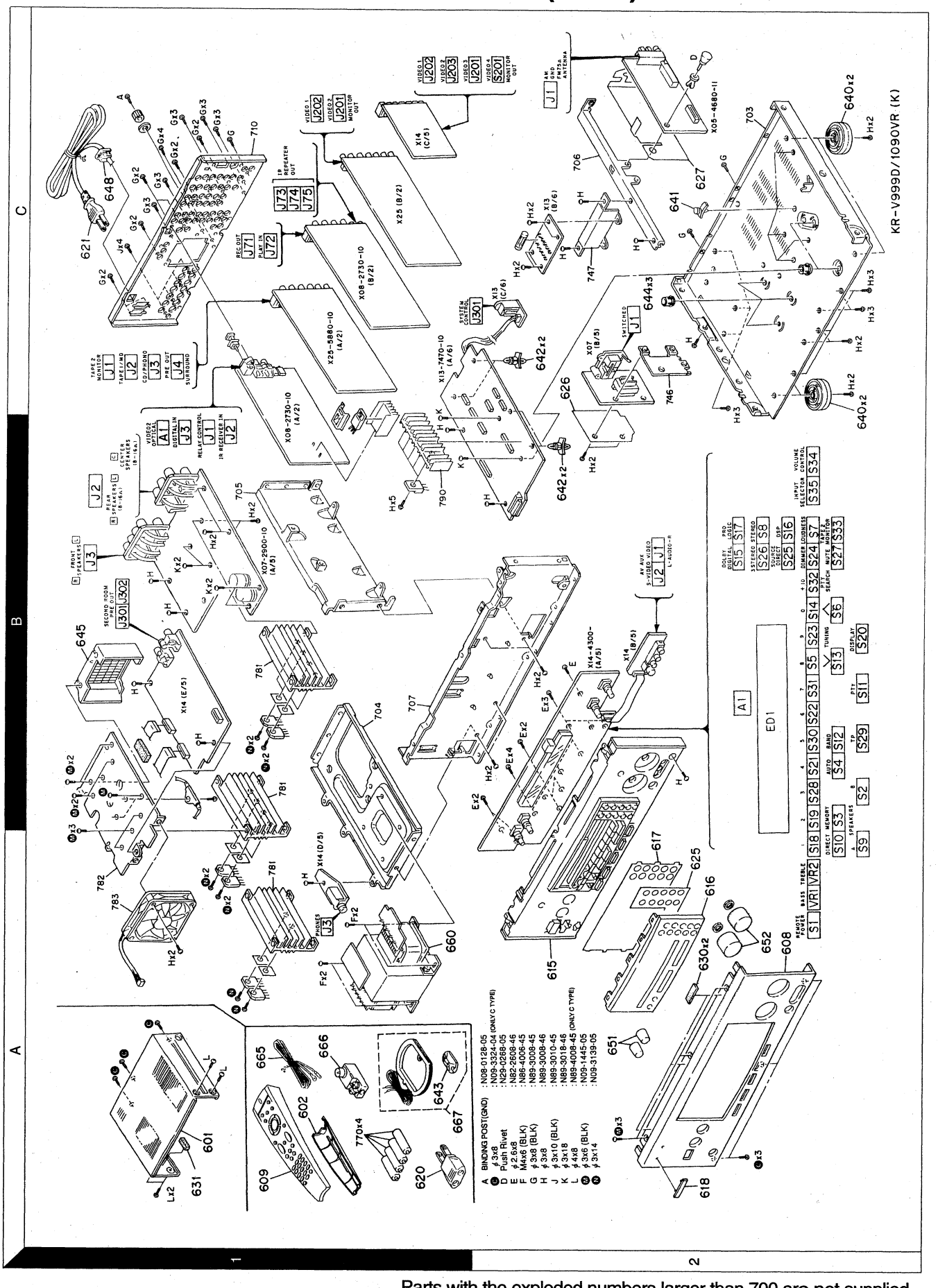




Parts with the exploded numbers larger than 700 are not supplied.

# KR-V999D/1090VR

## PARTS LIST

∗ New Parts
Parts without **Parts No.** are not supplied.
Les articles non mentionnes dans le **Parts No.** ne sont pas fournis.
Teile ohne **Parts No.** werden nicht geliefert.

❶

| Ref. No | Address | New Parts | Parts No. | Description | Destination | Remarks |
|---|---|---|---|---|---|---|
| **KR-V999D/1090VR** | | | | | | |
| 601 | 1A | ∗ | A01-3394-11 | METALLIC CABINET(GOLD) | C | |
| 601 | 1A | ∗ | A01-3396-01 | METALLIC CABINET(BLACK) | KPYMTE | |
| 601 | 1A | ∗ | A01-3396-01 | METALLIC CABINET(BLACK) | Q | |
| 602 | 1A | ∗ | A09-0366-08 | BATTERY COVER (FOR RC-R0905) | | |
| 608 | 2A | ∗ | A60-1046-12 | PANEL (TITAN) | KPY | |
| 608 | 2A | ∗ | A60-1047-02 | PANEL (BLACK) | TEQ | |
| 608 | 2A | ∗ | A60-1076-02 | PANEL (BLACK) | M | |
| 608 | 2A | ∗ | A60-1077-02 | PANEL (GOLD) | C | |
| 609 | 2A | ∗ | A70-1114-05 | REMOTE CONTROLLER (RC-R0905) | | |
| 615 | 2A | ∗ | B01-0525-11 | PANEL ESCUTCHEON | M | |
| 615 | 2A | ∗ | B01-0527-11 | PANEL ESCUTCHEON | KPYTEQ | |
| 615 | 2A | ∗ | B01-0532-11 | PANEL ESCUTCHEON | C | |
| 616 | 2A | ∗ | B10-2297-02 | FRONT GLASS | KPYTEQ | |
| 616 | 2A | ∗ | B10-2298-02 | FRONT GLASS | M | |
| 616 | 2A | ∗ | B10-2332-02 | FRONT GLASS | C | |
| 617 | 1A | ∗ | B11-0295-03 | COLOR FILTER | KPYMTE | |
| 617 | 1A | ∗ | B11-0295-03 | COLOR FILTER | Q | |
| 617 | 1A | ∗ | B11-0344-13 | COLOR FILTER | C | |
| 618 | 2A | | B43-0302-04 | KENWOOD BADGE | KPYMTE | |
| 618 | 2A | | B43-0302-04 | KENWOOD BADGE | Q | |
| 618 | 2A | | B43-0305-04 | KENWOOD BADGE | C | |
| - | | | B46-0197-00 | QUESTIONNAIRE CARD | K | |
| - | | | B46-0310-03 | WARRANTY CARD | TEQ | |
| - | | | B46-0326-03 | WARRANTY CARD | C | |
| - | | ∗ | B46-0330-03 | WARRANTY CARD | KY | |
| - | | ∗ | B46-0336-03 | WARRANTY CARD | P | |
| - | | | B58-0513-04 | CAUTION CARD (PRESET220-240) | Y | |
| - | | | B58-0964-13 | CAUTION CARD (UL) | KY | |
| - | | ∗ | B58-0965-13 | CAUTION CARD (T,X PL) | T | |
| - | | ∗ | B58-0966-13 | CAUTION CARD (ELM PL) | CE | |
| - | | ∗ | B58-0967-03 | CAUTION CARD (P PL) | P | |
| - | | ∗ | B58-1526-03 | CAUTION CARD (P4,ORI,A4,1(Q) | Q | |
| - | | | B59-1104-00 | SERVICE DIRECTORY | Y | |
| - | | ∗ | B60-3008-00 | INSTRUCTION MANUAL(ENGLISH) | KPY | |
| - | | ∗ | B60-3009-00 | INSTRUCTION MANUAL(ENGLISH) | T | |
| - | | ∗ | B60-3010-00 | INSTRUCTION MANUAL(ENGLISH) | CM | |
| - | | ∗ | B60-3011-00 | INSTRUCTION MANUAL(FRENCH) | P | |
| - | | ∗ | B60-3012-00 | INSTRUCTION MANUAL(FRENCH) | E | |
| - | | ∗ | B60-3013-00 | INSTRUCTION MANUAL(SPANISH) | M | |
| - | | ∗ | B60-3014-00 | INSTRUCTION MANUAL(ITALIAN) | E | |
| - | | ∗ | B60-3124-00 | INSTRUCTION MANUAL(GERMAN) | E | |
| - | | ∗ | B60-3126-00 | INSTRUCTION MANUAL(CHINESE) | M | |
| - | | ∗ | B60-3127-00 | INSTRUCTION MANUAL(CHINESE) | C | |
| - | | ∗ | B60-3251-00 | INSTRUCTION MANUAL(DUTCH) | E | |
| - | | ∗ | B60-3252-00 | INSTRUCTION MANUAL(SPANISH) | E | |
| - | | ∗ | B60-3299-00 | INSTRUCTION MANUAL(RUSSIAN) | Q | |
| - | | ∗ | B60-3300-00 | INSTRUCTION MANUAL(POLISH) | Q | |
| ⚠ 620 | 1A | ∗ | E03-0343-05 | AC PLUG ADAPTER | M | |
| ⚠ 621 | 1C | | E30-2579-05 | AC POWER CORD | EQM | |
| ⚠ 621 | 1C | | E30-2739-05 | AC POWER CORD | Y | |
| ⚠ 621 | 1C | | E30-2787-05 | AC POWER CORD | KP | |
| ⚠ 621 | 1C | | E30-2791-05 | AC POWER CORD | T | |

**L** : Scandinavia **K** : USA **P** : Canada **R** : Mexico
**Y** : PX(Far East, Hawaii) **T** : Europe **E** : Europe **G** : Germany
**Y** : AAFES(Europe) **X** : Australia **M** : Other Areas **Q** : Russia

⚠ indicates safety critical components.

∗ New Parts
Parts without **Parts No.** are not supplied.
Les articles non mentionnes dans le **Parts No.** ne sont pas fournis.
Teile ohne **Parts No.** werden nicht geliefert.

❷

| Ref. No | Address | New Parts | Parts No. | Description | Destination | Remarks |
|---|---|---|---|---|---|---|
| ⚠ 621 | 1C | | E30-2825-05 | AC POWER CORD | C | |
| 625 | 2A | ∗ | F19-1076-03 | BLIND PLATE | C | |
| 626 | 2C | ∗ | F20-3503-14 | INSULATING BOARD | | |
| 627 | 2C | ∗ | F20-3504-03 | INSULATING BOARD | | |
| 630 | 2A | | G11-0155-14 | SOFT TAPE (40X9X2) | | |
| 631 | 1A | | G11-1167-04 | SOFT TAPE | | |
| - | | ∗ | H10-7312-02 | POLYSTYRENE FOAMED FIXTURE | | |
| - | | ∗ | H10-7313-02 | POLYSTYRENE FOAMED FIXTURE | | |
| - | | ∗ | H12-2328-04 | PACKING FIXTURE | CTM | |
| - | | | H25-0232-04 | PROTECTION BAG (235X350X0.03) | KPYMCE | |
| - | | | H25-0232-04 | PROTECTION BAG (235X350X0.03) | Q | |
| - | | | H25-0651-04 | PROTECTION BAG | T | |
| - | | | H25-0661-04 | PROTECTION BAG | | |
| - | | ∗ | H50-2196-04 | ITEM CARTON CASE | KPY | |
| - | | ∗ | H50-2197-04 | ITEM CARTON CASE | E | |
| - | | ∗ | H50-2260-04 | ITEM CARTON CASE | T | |
| - | | ∗ | H50-2402-04 | ITEM CARTON CASE | M | |
| - | | ∗ | H50-2403-04 | ITEM CARTON CASE | C | |
| - | | ∗ | H50-2480-04 | ITEM CARTON CASE | Q | |
| 640 | 2B,2C | ∗ | J02-1147-13 | FOOT (D=46,H=18.5) | KPYMTE | |
| 640 | 2B,2C | ∗ | J02-1147-13 | FOOT (D=46,H=18.5) | Q | |
| 640 | 2B,2C | ∗ | J02-1170-03 | FOOT | C | |
| 641 | 2C | | J19-3300-05 | UNIT HOLDER | | |
| 642 | 2C | | J19-3324-15 | UNIT HOLDER | | |
| 643 | 1A | | J19-3645-05 | ANT HOLDER | | |
| 644 | 2C | ∗ | J19-3732-04 | UNIT HOLDER | | |
| 645 | 1B | ∗ | J19-5778-03 | HOLDER | | |
| ⚠ 648 | 1C | | J42-0083-05 | POWER CORD BUSHING | | |
| - | | | J61-0098-05 | WIRE BAND | | |
| - | | | J61-0307-05 | WIRE BAND | M | |
| 651 | 2A | | K29-6249-04 | KNOB | KPYMTE | |
| 651 | 2A | | K29-6249-04 | KNOB | Q | |
| 651 | 2A | ∗ | K29-6556-04 | KNOB (GOLD) | C | |
| 652 | 2A | ∗ | K29-6251-04 | KNOB | KPYMTE | |
| 652 | 2A | ∗ | K29-6251-04 | KNOB | Q | |
| 652 | 2A | ∗ | K29-6557-04 | KNOB (GOLD) | C | |
| - | | | K27-2176-04 | KNOB (BUTTON) | MTEQ | |
| - | | | K27-2177-04 | KNOB (BUTTON : GOLD) | C | |
| ⚠ 660 | 1A | ∗ | L07-2272-05 | POWER TRANSFORMER | KP | |
| 660 | 1A | ∗ | L07-2273-05 | POWER TRANSFORMER | YM | |
| ⚠ 660 | 1A | ∗ | L07-2274-05 | POWER TRANSFORMER | TEQ | |
| ⚠ 660 | 1A | ∗ | L07-2355-05 | POWER TRANSFORMER | C | |
| 665 | 1A | | T90-0176-05 | T TYPE ANTENNA | | |
| 666 | 1A | | T90-0185-05 | ANTENNA ADAPTOR | | |
| 667 | 1A | | T90-0820-05 | LOOP ANTENNA | | |
| **TUNER UNIT (X05-467X-XX)** | | | | | | |
| C1 ,2 | | | CK73FB1H103K | CHIP C 0.010UF K | | |
| C5 | | | CK73FB1H102K | CHIP C 1000PF K | | |
| C8 | | | CK73FB1H103K | CHIP C 0.010UF K | | |
| C9 | | | CE04LW1C100M | ELECTRO 10UF 16WV | | |
| C10 | | | CK73FB1H473K | CHIP C 0.047UF K | | |

**L** : Scandinavia **K** : USA **P** : Canada **R** : Mexico
**Y** : PX(Far East, Hawaii) **T** : Europe **E** : Europe **G** : Germany
**Y** : AAFES(Europe) **X** : Australia **M** : Other Areas **Q** : Russia

⚠ indicates safety critical components.

# KR-V999D/1090VR

## PARTS LIST

* New Parts
Parts without **Parts No.** are not supplied.
Les articles non mentionnes dans le **Parts No.** ne sont pas fournis.
Teile ohne **Parts No.** werden nicht geliefert.

❸

| Ref. No | Address | New Parts | Parts No. | Description | | | | Destination | Remarks |
|---|---|---|---|---|---|---|---|---|---|
| C11 | | | CE04LW1H010M | ELECTRO | 1.0UF | 50WV | | | |
| C12 | | | CE04LW1H2R2M | ELECTRO | 2.2UF | 50WV | | | |
| C13 | | | CK73FB1H102K | CHIP C | 1000PF | K | | | |
| C14 | | | CE04LW1H010M | ELECTRO | 1.0UF | 50WV | | | |
| C15 | | | CC73FCH1H220J | CHIP C | 22PF | J | | | |
| C16 | | | CE04LW1C100M | ELECTRO | 10UF | 16WV | | | |
| C17 | | | CK73FB1H562K | CHIP C | 5600PF | K | | | |
| C18 | | | CK73FB1H102K | CHIP C | 1000PF | K | | | |
| C19 | | | CE04HW1E4R7M | NP-ELEC | 4.7UF | 25WV | | | |
| C20 | | | CK73FB1E104K | CHIP C | 0.10UF | K | | | |
| C21 ,22 | | | CQ93FMG1H113J | MYLAR | 0.011UF | J | | | |
| C23 | | | CE04LW1H010M | ELECTRO | 1.0UF | 50WV | | | |
| C25 | | | CE04LW1C100M | ELECTRO | 10UF | 16WV | | | |
| C26 | | | CE04LW1C470M | ELECTRO | 47UF | 16WV | | | |
| C27 | | | CE04LW1H010M | ELECTRO | 1.0UF | 50WV | | | |
| C28 | | | CQ93FMG1H223J | MYLAR | 0.022UF | J | | | |
| C29 | | | CE04LW1H2R2M | ELECTRO | 2.2UF | 50WV | | | |
| C30 | | | CE04LW1C101M | ELECTRO | 100UF | 16WV | | | |
| C31 | | | CE04LW1A470M | ELECTRO | 47UF | 10WV | | | |
| C32 | | | CK73FB1H103K | CHIP C | 0.010UF | K | | | |
| C33 | | | CC73FSL1H101J | CHIP C | 100PF | J | | | |
| C34 ,35 | | | CK73FB1H102K | CHIP C | 1000PF | K | | | |
| C36 | | | CC73FCH1H270J | CHIP C | 27PF | J | | | |
| C37 | | | CC73FCH1H220J | CHIP C | 22PF | J | | | |
| C38 | | | CK73FB1H471K | CHIP C | 470PF | K | | | |
| C57 ,58 | | | CE04LW1H010M | ELECTRO | 1.0UF | 50WV | | | |
| C59 ,60 | | | CE04LW1C100M | ELECTRO | 10UF | 16WV | | | |
| C61 ,62 | | | CQ93FMG1H472J | MYLAR | 4700PF | J | | CM | |
| C63 | | | CC73FCH1H220J | CHIP C | 22PF | J | | | |
| C64 | | | CC73FCH1H330J | CHIP C | 33PF | J | | | |
| C65 | | | CC73FCH1H040C | CHIP C | 4.0PF | C | | | |
| C67 | | | CK73FB1H102K | CHIP C | 1000PF | K | | | |
| CN1 | | | E40-4609-05 | PIN ASSY | | | | | |
| J1 | | | E70-0052-05 | LOCK TERMINAL BOARD | | | | | |
| CF1 ,2 | | | L72-0531-05 | CERAMIC FILTER | | | | | |
| CF3 | | | L72-0593-05 | CERAMIC FILTER | | | | | |
| L1 | | | L39-1348-05 | COMBINATION COIL | | | | | |
| L2 | | | L30-0911-05 | AM IFT | | | | | |
| L3 ,4 | | | L40-1091-17 | SMALL FIXED INDUCTOR(1UH) | | | | | |
| X1 | | * | L77-2159-05 | CRYSTAL RESONATOR(7.2MHZ) | | | | | |
| X2 | | | L78-0637-05 | RESONATOR | (456KHZ) | | | | |
| R1 | | | RK73FB2A332J | CHIP R | 3.3K | J | 1/10W | | |
| R2 | | | RK73FB2A681J | CHIP R | 680 | J | 1/10W | | |
| R3 | | | RK73FB2A100J | CHIP R | 10 | J | 1/10W | | |
| R4 ,5 | | | RK73FB2A331J | CHIP R | 330 | J | 1/10W | | |
| R6 | | | RK73FB2A101J | CHIP R | 100 | J | 1/10W | | |
| R7 | | | RK73FB2A473J | CHIP R | 47K | J | 1/10W | | |
| R8 | | | RK73FB2A331J | CHIP R | 330 | J | 1/10W | | |
| R12 | | | RK73FB2A102J | CHIP R | 1.0K | J | 1/10W | | |
| R13 | | | RK73FB2A473J | CHIP R | 47K | J | 1/10W | | |
| R15 ,16 | | | RK73FB2A393J | CHIP R | 39K | J | 1/10W | | |
| R17 | | | RK73FB2A271J | CHIP R | 270 | J | 1/10W | | |
| R18 | | | RK73FB2A302J | CHIP R | 3.0K | J | 1/10W | | |

**L** : Scandinavia **K** : USA **P** : Canada **R** : Mexico
**Y** : PX(Far East, Hawaii) **T** : Europe **E** : Europe **G** : Germany
**Y** : AAFES(Europe) **X** : Australia **M** : Other Areas **Q** : Russia

⚠ indicates safety critical components.

* New Parts
Parts without **Parts No.** are not supplied.
Les articles non mentionnes dans le **Parts No.** ne sont pas fournis.
Teile ohne **Parts No.** werden nicht geliefert.

❹

| Ref. No | Address | New Parts | Parts No. | Description | | | | Destination | Remarks |
|---|---|---|---|---|---|---|---|---|---|
| R19 | | | RK73FB2A822J | CHIP R | 8.2K | J | 1/10W | | |
| R20 -23 | | | RK73FB2A102J | CHIP R | 1.0K | J | 1/10W | | |
| R24 | | | RK73FB2A562J | CHIP R | 5.6K | J | 1/10W | | |
| R25 | | | RD14NB2E101J | RD | 100 | J | 1/4W | | |
| R26 | | | RD14NB2E561J | RD | 560 | J | 1/4W | | |
| R27 ,28 | | | RK73FB2A103J | CHIP R | 10K | J | 1/10W | | |
| R29 ,30 | | | RK73FB2A102J | CHIP R | 1.0K | J | 1/10W | | |
| R31 | | | RK73FB2A103J | CHIP R | 10K | J | 1/10W | | |
| R32 | | | RK73FB2A122J | CHIP R | 1.2K | J | 1/10W | | |
| R33 | | | RK73FB2A123J | CHIP R | 12K | J | 1/10W | | |
| R41 | | | RS14KB3A271JFR | FL-PROOF RS | 270 | J | 1W | | |
| R42 | | | RD14NB2E271J | RD | 270 | J | 1/4W | | |
| R44 | | | RK73FB2A101J | CHIP R | 100 | J | 1/10W | | |
| R46 | | | RK73FB2A104J | CHIP R | 100K | J | 1/10W | | |
| R47 | | | RK73FB2A153J | CHIP R | 15K | J | 1/10W | | |
| R48 ,49 | | | RK73FB2A473J | CHIP R | 47K | J | 1/10W | | |
| R50 | | | RK73FB2A471J | CHIP R | 470 | J | 1/10W | | |
| R51 -54 | | | RK73FB2A473J | CHIP R | 47K | J | 1/10W | | |
| R55 ,56 | | | RK73FB2A154J | CHIP R | 150K | J | 1/10W | | |
| R59 ,60 | | | RK73FB2A332J | CHIP R | 3.3K | J | 1/10W | | |
| R61 | | | RK73FB2A103J | CHIP R | 10K | J | 1/10W | | |
| R62 | | | RK73FB2A563J | CHIP R | 56K | J | 1/10W | | |
| R63 | | | RK73FB2A821J | CHIP R | 820 | J | 1/10W | | |
| R64 | | | RK73FB2A102J | CHIP R | 1.0K | J | 1/10W | | |
| R65 | | | RK73EB2B102J | CHIP R | 1.0K | J | 1/8W | | |
| R73 | | | RK73FB2A681J | CHIP R | 680 | J | 1/10W | | |
| W101-106 | | | R92-0670-05 | CHIP R | 0 OHM | | | | |
| W108-113 | | | R92-0670-05 | CHIP R | 0 OHM | | | | |
| W115 | | | R92-0670-05 | CHIP R | 0 OHM | | | | |
| W201-212 | | | R92-0679-05 | CHIP R | 0 OHM | | | | |
| S1 | | | S62-0034-05 | SLIDE SWITCH | | | | | |
| D1 ,2 | | | HSS104 | DIODE | | | | | |
| D1 ,2 | | | 1SS133 | DIODE | | | | | |
| D3 ,4 | | | HZS5.1N(B2) | ZENER DIODE | | | | | |
| D3 ,4 | | | RD5.1ES(B2) | ZENER DIODE | | | | | |
| D8 | | | HSS104 | DIODE | | | | | |
| D8 | | | 1SS133 | DIODE | | | | | |
| D10 | | | MA111 | DIODE | | | | | |
| D12 | | | HZS3.3N(B2) | ZENER DIODE | | | | | |
| D12 | | | RD3.3ES(B2) | ZENER DIODE | | | | | |
| D13 | | | HZS2.7N(B2) | ZENER DIODE | | | | | |
| D13 | | | RD2.7ES(B2) | ZENER DIODE | | | | | |
| IC1 | | | LA1832 | ANALOGUE IC | | | | | |
| IC2 | | | LC72131 | MOS-IC | | | | | |
| IC4 | | | NJM4565M | IC(OP AMP X2) | | | | | |
| Q1 | | | 2SC2714(R,O) | TRANSISTOR | | | | | |
| Q3 | | | 2SA1576A(R,S) | TRANSISTOR | | | | | |
| Q3 | | | 2SA1586(Y,GR) | TRANSISTOR | | | | | |
| Q5 | | | 2SC4081(R,S) | TRANSISTOR | | | | | |
| Q5 | | | 2SC4116(Y,GR) | TRANSISTOR | | | | | |
| Q6 | | | 2SA1576A(R,S) | TRANSISTOR | | | | | |
| Q6 | | | 2SA1586(Y,GR) | TRANSISTOR | | | | | |
| Q7 ,8 | | | 2SD1757K | TRANSISTOR | | | | | |
| Q9 ,10 | | | 2SC4081(R,S) | TRANSISTOR | | | | | |

**L** : Scandinavia **K** : USA **P** : Canada **R** : Mexico
**Y** : PX(Far East, Hawaii) **T** : Europe **E** : Europe **G** : Germany
**Y** : AAFES(Europe) **X** : Australia **M** : Other Areas **Q** : Russia

⚠ indicates safety critical components.

* New Parts
Parts without **Parts No.** are not supplied.
Les articles non mentionnes dans le **Parts No.** ne sont pas fournis.
Teile ohne **Parts No.** werden nicht geliefert.

5

| Ref. No | Add-ress | New Parts | Parts No. | Description | | | Desti-nation | Re-marks |
|---|---|---|---|---|---|---|---|---|
| Q9 ,10 | | | 2SC4116(Y,GR) | TRANSISTOR | | | | |
| A1 | | | W02-2582-05 | FM FRONT-END ASSY | | | | |
| **TUNER UNIT (X05-468X-XX)** | | | | | | | | |
| C1 | | | CE04LW1C470M | ELECTRO | 47UF | 16WV | | |
| C2 | | | CE04LW1H010M | ELECTRO | 1.0UF | 50WV | | |
| C3 | | | CK73FB1H103K | CHIP C | 0.010UF | K | | |
| C5 -10 | | | CK73FB1H103K | CHIP C | 0.010UF | K | | |
| C30 | | | CK73EB1E473K | CHIP C | 0.047UF | K | | |
| C31 | | | CE04LW1C470M | ELECTRO | 47UF | 16WV | | |
| C32 | | | CK73FB1H103K | CHIP C | 0.010UF | K | | |
| C33 | | | CE04LW1C100M | ELECTRO | 10UF | 16WV | | |
| C34 | | | CK73FB1H103K | CHIP C | 0.010UF | K | | |
| C35 | | | CE04LW1C100M | ELECTRO | 10UF | 16WV | | |
| C36 | | | CK73FB1E473K | CHIP C | 0.047UF | K | | |
| C37 | | | CK73FB1H103K | CHIP C | 0.010UF | K | | |
| C38 | | | C90-3217-05 | ELECTRO | 10UF | 10WV | | |
| C40 | | | C90-3253-05 | ELECTRO | 1.0UF | 50WV | | |
| C41 | | | C90-3251-05 | ELECTRO | 0.47UF | 50WV | | |
| C42 | | | C90-3240-05 | ELECTRO | 2.2UF | 35WV | | |
| C43 | | | CE04LW1HR47M | ELECTRO | 0.47UF | 50WV | | |
| C44 | | | CK73FB1E473K | CHIP C | 0.047UF | K | | |
| C45 | | | CC73FCH1H220J | CHIP C | 22PF | J | | |
| C46 | | | CE04LW1A101M | ELECTRO | 100UF | 10WV | | |
| C47 | | | CK73FB1H103K | CHIP C | 0.010UF | K | | |
| C48 | | | CC73FSL1H101J | CHIP C | 100PF | J | | |
| C49 | | | CE04LW1H010M | ELECTRO | 1.0UF | 50WV | | |
| C50 | | | CK73FB1H152K | CHIP C | 1500PF | K | TEQ | |
| C51 ,52 | | | C90-3217-05 | ELECTRO | 10UF | 10WV | | |
| C53 ,54 | | | CK73FB1H223K | CHIP C | 0.022UF | K | YTEQ | |
| C53 ,54 | | | CK73FB1H333K | CHIP C | 0.033UF | K | KP | |
| C55 ,56 | | | CE04LW1H2R2M | ELECTRO | 2.2UF | 50WV | | |
| C57 ,58 | | | CK73FB1H822K | CHIP C | 8200PF | K | | |
| C59 | | | CC73FSL1H101J | CHIP C | 100PF | J | | |
| C60 | | | CK73FB1E104K | CHIP C | 0.10UF | K | | |
| C61 | | | CK73FB1H103K | CHIP C | 0.010UF | K | | |
| C64 | | | CK73FB1H333K | CHIP C | 0.033UF | K | | |
| C66 | | | CC73FCH1H060D | CHIP C | 6.0PF | D | | |
| C67 | | | CC73FCH1H220J | CHIP C | 22PF | J | | |
| C68 | | | CC73FSL1H020C | CHIP C | 2.0PF | C | | |
| C70 | | | CC73FSL1H101J | CHIP C | 100PF | J | | |
| C71 ,72 | | | CK73FB1H103K | CHIP C | 0.010UF | K | Y | |
| C73 | | | CK73FB1H681K | CHIP C | 680PF | K | KPY | |
| C81 | | | CC73FCH1H220J | CHIP C | 22PF | J | | |
| C82 | | | CC73FCH1H270J | CHIP C | 27PF | J | | |
| C84 | | | CK73FB1H102K | CHIP C | 1000PF | K | | |
| C85 | | | CC73FSL1H101J | CHIP C | 100PF | J | | |
| C86 | | | CK73FB1H102K | CHIP C | 1000PF | K | | |
| C87 | | | CE04LW1C100M | ELECTRO | 10UF | 16WV | | |
| C89 | | | CE04LW1C470M | ELECTRO | 47UF | 16WV | | |
| C90 | | | CE04LW1H2R2M | ELECTRO | 2.2UF | 50WV | | |
| C91 | | | CK73FB1H223K | CHIP C | 0.022UF | K | | |
| C92 | | | CC73FSL1H471J | CHIP C | 470PF | J | | |
| C93 | | | CK73FB1H103K | CHIP C | 0.010UF | K | | |

**L** : Scandinavia **K** : USA **P** : Canada **R** : Mexico
**Y** : PX(Far East, Hawaii) **T** : Europe **E** : Europe **G** : Germany
**Y** : AAFES(Europe) **X** : Australia **M** : Other Areas **Q** : Russia

⚠ indicates safety critical components.

* New Parts
Parts without **Parts No.** are not supplied.
Les articles non mentionnes dans le **Parts No.** ne sont pas fournis.
Teile ohne **Parts No.** werden nicht geliefert.

6

| Ref. No | Add-ress | New Parts | Parts No. | Description | | | | Desti-nation | Re-marks |
|---|---|---|---|---|---|---|---|---|---|
| C96 | | | CK73FB1H102K | CHIP C | 1000PF | K | | | |
| CN1 | | | E40-4609-05 | PIN ASSY | | | | | |
| CN2 | | | E40-4871-05 | PIN ASSY | | | | | |
| J1 | | | E70-0052-05 | LOCK TERMINAL BOARD | | | | | |
| CF1 ,2 | | | L72-0536-05 | CERAMIC FILTER | | | | TEQ | |
| CF1 ,2 | | | L72-0596-05 | CERAMIC FILTER | | | | KPY | |
| L31 | | * | L30-0943-05 | FM IFT | | | | | |
| L32 | | * | L30-0944-05 | FM IFT | | | | | |
| L33 | | | L30-0911-05 | AM IFT | | | | | |
| L34 | | | L79-1240-05 | LC FILTER | | | | TEQ | |
| L35 ,36 | | | L79-1239-05 | LC FILTER | | | | | |
| L61 | | | L40-1091-17 | SMALL FIXED INDUCTOR(1UH) | | | | | |
| L62 | | | L39-1351-05 | COMBINATION COIL | | | | | |
| L63 | | | L40-1001-17 | SMALL FIXED INDUCTOR(10UH,K) | | | | | |
| L81 | | | L40-1091-17 | SMALL FIXED INDUCTOR(1UH) | | | | | |
| X31 | | | L78-0637-05 | RESONATOR (456KHZ) | | | | | |
| X81 | | | L77-2159-05 | CRYSTAL RESONATOR(7.2MHZ) | | | | | |
| R1 | | | RD14NB2E221J | RD | 220 | J | 1/4W | | |
| R2 | | | RK73FB2A221J | CHIP R | 220 | J | 1/10W | | |
| R3 | | | RK73FB2A182J | CHIP R | 1.8K | J | 1/10W | TEQ | |
| R3 | | | RK73FB2A561J | CHIP R | 560 | J | 1/10W | KPY | |
| R4 | | | RK73FB2A222J | CHIP R | 2.2K | J | 1/10W | | |
| R5 | | | RK73FB2A103J | CHIP R | 10K | J | 1/10W | | |
| R7 | | | RK73FB2A221J | CHIP R | 220 | J | 1/10W | | |
| R8 | | | RK73FB2A681J | CHIP R | 680 | J | 1/10W | | |
| R9 | | | RK73FB2A470J | CHIP R | 47 | J | 1/10W | | |
| R10 | | | RK73FB2A101J | CHIP R | 100 | J | 1/10W | | |
| R11 | | | RK73FB2A331J | CHIP R | 330 | J | 1/10W | | |
| R12 | | | RK73FB2A101J | CHIP R | 100 | J | 1/10W | | |
| R13 | | | RK73FB2A681J | CHIP R | 680 | J | 1/10W | | |
| R14 | | | RK73FB2A332J | CHIP R | 3.3K | J | 1/10W | | |
| R15 | | | RK73FB2A331J | CHIP R | 330 | J | 1/10W | | |
| R16 | | | RK73FB2A100J | CHIP R | 10 | J | 1/10W | TEQ | |
| R16 | | | RK73FB2A150J | CHIP R | 15 | J | 1/10W | KPY | |
| R17 | | | RK73FB2A331J | CHIP R | 330 | J | 1/10W | | |
| R18 | | | RK73FB2A391J | CHIP R | 390 | J | 1/10W | | |
| R19 | | | RK73FB2A681J | CHIP R | 680 | J | 1/10W | | |
| R20 | | | RK73FB2A100J | CHIP R | 10 | J | 1/10W | TEQ | |
| R20 | | | RK73FB2A150J | CHIP R | 15 | J | 1/10W | KPY | |
| R21 | | | RK73FB2A101J | CHIP R | 100 | J | 1/10W | | |
| R22 | | | RK73FB2A100J | CHIP R | 10 | J | 1/10W | | |
| R31 | | * | RS14KB3A151JFR | FL-PROOF RS | 150 | J | 1W | | |
| R32 | | | RK73EB2B432J | CHIP R | 4.3K | J | 1/8W | | |
| R33 | | | RK73FB2A302J | CHIP R | 3.0K | J | 1/10W | | |
| R34 | | | RK73FB2A822J | CHIP R | 8.2K | J | 1/10W | | |
| R35 | | | RK73FB2A333J | CHIP R | 33K | J | 1/10W | | |
| R36 | | | RK73FB2A393J | CHIP R | 39K | J | 1/10W | | |
| R37 | | | RK73FB2A332J | CHIP R | 3.3K | J | 1/10W | | |
| R38 | | | RK73FB2A333J | CHIP R | 33K | J | 1/10W | | |
| R39 | | | RK73FB2A823J | CHIP R | 82K | J | 1/10W | | |
| R40 | | | RK73FB2A202J | CHIP R | 2.0K | J | 1/10W | | |
| R41 | | | RK73FB2A222J | CHIP R | 2.2K | J | 1/10W | | |
| R42 | | | RK73FB2A202J | CHIP R | 2.0K | J | 1/10W | TEQ | |

**L** : Scandinavia **K** : USA **P** : Canada **R** : Mexico
**Y** : PX(Far East, Hawaii) **T** : Europe **E** : Europe **G** : Germany
**Y** : AAFES(Europe) **X** : Australia **M** : Other Areas **Q** : Russia

⚠ indicates safety critical components.

* New Parts
Parts without **Parts No.** are not supplied.
Les articles non mentionnes dans le **Parts No.** ne sont pas fournis.
Teile ohne **Parts No.** werden nicht geliefert.

❼

| Ref. No | Address | New Parts | Parts No. | Description | Destination | Remarks |
|---|---|---|---|---|---|---|
| R43 ,44 | | | RK73FB2A222J | CHIP R 2.2K J 1/10W | | |
| R45 ,46 | | | RK73FB2A102J | CHIP R 1.0K J 1/10W | | |
| R47 ,48 | | | RK73FB2A392J | CHIP R 3.9K J 1/10W | | |
| R49 | | | RK73FB2A473J | CHIP R 47K J 1/10W | | |
| R51 | | | RK73FB2A392J | CHIP R 3.9K J 1/10W | | |
| R52 | | | RK73FB2A104J | CHIP R 100K J 1/10W | | |
| R53 | | | RK73FB2A102J | CHIP R 1.0K J 1/10W | | |
| R55 | | | RK73FB2A562J | CHIP R 5.6K J 1/10W | | |
| R56 ,57 | | | RK73FB2A101J | CHIP R 100 J 1/10W | | |
| R59 | | | RK73FB2A272J | CHIP R 2.7K J 1/10W | | |
| R67 | | | RK73FB2A104J | CHIP R 100K J 1/10W | | |
| R69 | | | RK73FB2A103J | CHIP R 10K J 1/10W | | |
| R80 | | | RK73EB2B102J | CHIP R 1.0K J 1/8W | | |
| R81 -83 | | | RK73FB2A102J | CHIP R 1.0K J 1/10W | | |
| R84 | | | RK73FB2A103J | CHIP R 10K J 1/10W | | |
| R85 -88 | | | RK73FB2A102J | CHIP R 1.0K J 1/10W | | |
| R89 | | | RD14NB2E101J | RD 100 J 1/4W | | |
| R90 | | | RK73FB2A562J | CHIP R 5.6K J 1/10W | | |
| R91 | | | RK73FB2A222J | CHIP R 2.2K J 1/10W | | |
| R92 | | | RK73FB2A123J | CHIP R 12K J 1/10W | | |
| R93 | | | RK73FB2A122J | CHIP R 1.2K J 1/10W | | |
| R94 | | | RD14NB2E561J | RD 560 J 1/4W | | |
| R101,102 | | | RK73FB2A102J | CHIP R 1.0K J 1/10W | | |
| R103 | | | RK73FB2A821J | CHIP R 820 J 1/10W | | |
| R104 | | | RK73FB2A473J | CHIP R 47K J 1/10W | | |
| R105 | | | RK73FB2A822J | CHIP R 8.2K J 1/10W | | |
| W51 -55 | | | R92-0670-05 | CHIP R 0 OHM | | |
| W57 ,58 | | | R92-0679-05 | CHIP R 0 OHM | | |
| W59 | | | R92-0670-05 | CHIP R 0 OHM | | |
| W61 | | | R92-0670-05 | CHIP R 0 OHM | | |
| W62 -64 | | | R92-0679-05 | CHIP R 0 OHM | | |
| W66 ,67 | | | R92-0679-05 | CHIP R 0 OHM | | |
| W71 | | | R92-0670-05 | CHIP R 0 OHM | | |
| W72 | | | R92-0670-05 | CHIP R 0 OHM | Y | |
| W75 | | | R92-0670-05 | CHIP R 0 OHM | | |
| W81 | | | R92-0679-05 | CHIP R 0 OHM | | |
| W83 | | | R92-0679-05 | CHIP R 0 OHM | | |
| W85 | | | R92-0670-05 | CHIP R 0 OHM | | |
| S1 | | | S62-0034-05 | SLIDE SWITCH | Y | |
| D1 ,2 | | | HSS104 | DIODE | | |
| D1 ,2 | | | 1SS133 | DIODE | | |
| D31 | | | HZS8.2N(B2) | ZENER DIODE | | |
| D31 | | | RD8.2ES(B2) | ZENER DIODE | | |
| D32 | | | HSS104 | DIODE | | |
| D32 | | | 1SS133 | DIODE | | |
| D61 ,62 | | | HSS104 | DIODE | | |
| D61 ,62 | | | 1SS133 | DIODE | | |
| D81 | | | HZS5.1N(B2) | ZENER DIODE | | |
| D81 | | | RD5.1ES(B2) | ZENER DIODE | | |
| D101 | | | HZS3.3N(B2) | ZENER DIODE | | |
| D101 | | | RD3.3ES(B2) | ZENER DIODE | | |
| D102 | | | HZS2.7N(B2) | ZENER DIODE | | |
| D102 | | | RD2.7ES(B2) | ZENER DIODE | | |
| IC1 | | | LA1836 | ANALOGUE IC | | |

**L** : Scandinavia **K** : USA **P** : Canada **R** : Mexico
**Y** : PX(Far East, Hawaii) **T** : Europe **E** : Europe **G** : Germany
**Y** : AAFES(Europe) **X** : Australia **M** : Other Areas **Q** : Russia

⚠ indicates safety critical components.

* New Parts
Parts without **Parts No.** are not supplied.
Les articles non mentionnes dans le **Parts No.** ne sont pas fournis.
Teile ohne **Parts No.** werden nicht geliefert.

❽

| Ref. No | Address | New Parts | Parts No. | Description | Destination | Remarks |
|---|---|---|---|---|---|---|
| IC2 | | | LC72131 | MOS-IC | | |
| Q1 ,2 | | | 2SC4081(R,S) | TRANSISTOR | | |
| Q1 ,2 | | | 2SC4116(Y,GR) | TRANSISTOR | | |
| Q3 | | | 2SA1576A(R,S) | TRANSISTOR | | |
| Q3 | | | 2SA1586(Y,GR) | TRANSISTOR | | |
| Q4 | | | 2SC4081(R,S) | TRANSISTOR | | |
| Q4 | | | 2SC4116(Y,GR) | TRANSISTOR | | |
| Q31 -34 | | | 2SC4081(R,S) | TRANSISTOR | | |
| Q31 -34 | | | 2SC4116(Y,GR) | TRANSISTOR | | |
| Q81 | | | 2SA1576A(R,S) | TRANSISTOR | | |
| Q81 | | | 2SA1586(Y,GR) | TRANSISTOR | | |
| Q101,102 | | | 2SD1757K | TRANSISTOR | | |
| Q103 | | | 2SA1576A(R,S) | TRANSISTOR | | |
| Q103 | | | 2SA1586(Y,GR) | TRANSISTOR | | |
| A1 | | | W02-2582-05 | FM FRONT-END ASSY | KPY | |
| A1 | | * | W02-2584-05 | FM FRONT-END ASSY | TE | |
| A1 | | * | W02-2586-05 | FM FRONT-END ASSY | Q | |
| **POWER AMPLIFIER UNIT (X07-290X-XX)** | | | | | | |
| C1 -8 | | * | CK45FB1H332KMM | CERAMIC 3300PF K | | |
| C9 -12 | | | CK45FF1H103ZMM | CERAMIC 0.010UF Z | | |
| C13 ,14 | | | CE04KW2A2R2M | ELECTRO 2.2UF 100WV | | |
| C17 ,18 | | | CE04KW2A2R2M | ELECTRO 2.2UF 100WV | | |
| C21 ,22 | | | CE04KW2A2R2M | ELECTRO 2.2UF 100WV | | |
| C25 ,26 | | | CE04KW2A2R2M | ELECTRO 2.2UF 100WV | | |
| C29 -36 | | | CF92FV1H224J | MF-C 0.22UF J | | |
| C37 -42 | | | CQ93FMG1H472J | MYLAR 4700PF J | | |
| C43 ,44 | | * | CK45FB1H332KMM | CERAMIC 3300PF K | | |
| C45 | | * | CK45FF1H103ZMM | CERAMIC 0.010UF Z | | |
| C46 -49 | | | CE04KW2A2R2M | ELECTRO 2.2UF 100WV | | |
| C50 ,51 | | | CF92FV1H224J | MF-C 0.22UF J | | |
| C52 -58 | | | CQ93FMG1H102J | MYLAR 1000PF J | | |
| C59 | | | CQ93FMG1H472J | MYLAR 4700PF J | | |
| C60 | | | CE04KW1H100M | ELECTRO 10UF 50WV | | |
| C61 | | | CE04KW1A101M | ELECTRO 100UF 10WV | | |
| C62 | | | CE04KW0J331M | ELECTRO 330UF 6.3WV | | |
| C63 | | | CE04KW1V220M | ELECTRO 22UF 35WV | | |
| C64 | | | CE04KW1V470M | ELECTRO 47UF 35WV | | |
| C65 | | | CE04KW1H3R3M | ELECTRO 3.3UF 50WV | | |
| C66 ,67 | | | C90-3600-05 | ELECTRO 15000UF 82WV | | |
| C68 -73 | | * | CK45FE2H103PMM | CERAMIC 0.010UF P | | |
| C74 | | | CQ93FMG1H102J | MYLAR 1000PF J | | |
| C80 | | | CE04KW1A470M | ELECTRO 47UF 10WV | | |
| C81 | | | CE04KW1A221M | ELECTRO 220UF 10WV | | |
| C82 | | | CE04DW1E331M | ELECTRO 330UF 25WV | | |
| C83 | | | CE04KW1V4R7M | ELECTRO 4.7UF 35WV | | |
| C84 | | | CK45FF1H103ZMM | CERAMIC 0.010UF Z | | |
| ⚠ C85 | | | C91-1444-05 | MF 0.047UF 250VAC | | |
| ⚠ C86 | | | C91-1488-05 | MF 6800PF 250VAC | | |
| C88 | | * | CK45FF1H103ZMM | CERAMIC 0.010UF Z | | |
| CN5 | | | E40-4245-05 | PIN ASSY | CTKPY | |
| CN6 | | | E40-4294-05 | FLAT CABLE CONNECTOR | | |
| CN7 | | | E40-4808-05 | PIN ASSY | | |
| CN8 | | | E40-4293-05 | FLAT CABLE CONNECTOR | | |
| CN11 | | | E40-3247-05 | PIN ASSY | | |

**L** : Scandinavia **K** : USA **P** : Canada **R** : Mexico
**Y** : PX(Far East, Hawaii) **T** : Europe **E** : Europe **G** : Germany
**Y** : AAFES(Europe) **X** : Australia **M** : Other Areas **Q** : Russia

⚠ indicates safety critical components.

# KR-V999D/1090VR

## PARTS LIST

⁎ New Parts
Parts without **Parts No.** are not supplied.
Les articles non mentionnes dans le **Parts No.** ne sont pas fournis.
Teile ohne **Parts No.** werden nicht geliefert.

9

| | Ref. No | Add-ress | New Parts | Parts No. | Description | Desti-nation | Re-marks |
|---|---|---|---|---|---|---|---|
| ⚠ | CN14 | | | E40-3385-05 | PIN ASSY | MCTEQ | |
| | CN15-19 | | | E40-4871-05 | PIN ASSY | | |
| ⚠ | J1 | | | E03-0148-05 | AC OUTLET | KPY | |
| ⚠ | J1 | | | E03-0149-05 | AC OUTLET | EQM | |
| ⚠ | J1 | | | E03-0310-05 | AC OUTLET | T | |
| ⚠ | J1 | | ⁎ | E03-0330-05 | AC OUTLET | C | |
| | J2 | | | E70-0055-05 | SCREW TERMINAL BOARD | | |
| | J3 | | | E70-0049-05 | SCREW TERMINAL BOARD | | |
| | P2 | | ⁎ | E29-1625-04 | LEAD PLATE | | |
| ⚠ | F1 | | | F05-3121-05 | FUSE (SEMKO) (250V T3.15AL) | CTEQ | |
| ⚠ | F1 | | | F50-0078-05 | FUSE(5X20) | KP | |
| ⚠ | F1 ,2 | | | F05-3121-05 | FUSE (SEMKO) (250V T3.15AL) | MY | |
| ⚠ | F3 | | | F05-2525-05 | FUSE (SEMKO) (250V T2.5AL) | E | |
| | - | | | J61-0098-05 | WIRE BAND | | |
| | CN1 ,2 | | | J13-0075-05 | FUSE CLIP | | |
| | CN3 ,4 | | | J13-0075-05 | FUSE CLIP | MY | |
| | CN9 ,10 | | | J13-0075-05 | FUSE CLIP | E | |
| | E7 -9 | | | J11-0808-05 | WIRE CLAMPER | | |
| | L1 -5 | | | L39-0085-05 | PHASE COMPENSATION COIL | | |
| ⚠ | T1 | | | L07-0864-05 | POWER TRANSFORMER | KP | |
| ⚠ | T1 | | | L07-0865-05 | POWER TRANSFORMER | YMY | |
| ⚠ | T1 | | | L07-0867-05 | POWER TRANSFORMER | TE | |
| ⚠ | T1 | | | L07-2114-05 | POWER TRANSFORMER | CQ | |
| | R1 -4 | | | RD14NB2E151J | RD 150 J 1/4W | | |
| | R5 -12 | | | RD14NB2E470J | RD 47 J 1/4W | | |
| | R13 -20 | | | RD14NB2E101J | RD 100 J 1/4W | | |
| | R21 -28 | | | RD14NB2E332J | RD 3.3K J 1/4W | | |
| | R49 -52 | | ⁎ | RS14KB3A2R7JFR | FL-PROOF RS 2.7 J 1W | | |
| | R53 -56 | | | RD14NB2E220J | RD 22 J 1/4W | | |
| | R57 | | | RD14NB2E151J | RD 150 J 1/4W | | |
| | R58 ,59 | | | RD14NB2E470J | RD 47 J 1/4W | | |
| | R60 ,61 | | | RD14NB2E101J | RD 100 J 1/4W | | |
| | R62 ,63 | | | RD14NB2E332J | RD 3.3K J 1/4W | | |
| | R69 | | ⁎ | RS14KB3A2R7JFR | FL-PROOF RS 2.7 J 1W | | |
| | R70 | | | RD14NB2E220J | RD 22 J 1/4W | | |
| ⚠ | R71 ,72 | | | RD14NB2E391J | RD 390 J 1/4W | | |
| ⚠ | R73 | | ⁎ | RS14KB3A181JFR | FL-PROOF RS 180 J 1W | | |
| ⚠ | R74 | | | RD14NB2E102J | RD 1.0K J 1/4W | | |
| | R84 ,85 | | | RD14NB2E102J | RD 1.0K J 1/4W | | |
| ⚠ | R88 | | ⁎ | RS14KB3A471JFR | FL-PROOF RS 470 J 1W | | |
| ⚠ | R93 | | | R92-1844-05 | CARBON 3.3M J 1/2W | KP | |
| | R100,101 | | | RD14NB2E3R9J | RD 3.9 J 1/4W | | |
| | VR1 -5 | | | R12-0605-05 | TRIMMING POT.(220 ｱﾙ) | | |
| ⚠ | K1 | | | S76-0065-05 | MAGNETIC RELAY | KP | |
| ⚠ | K1 | | ⁎ | S76-0070-05 | MAGNETIC RELAY | MYCTEQ | |
| | K2 -5 | | | S76-0061-05 | MAGNETIC RELAY | | |
| ⚠ | K6 | | | S76-0063-05 | MAGNETIC RELAY | | |
| | K7 | | | S76-0028-05 | MAGNETIC RELAY | | |
| ⚠ | S2 | | | S31-3010-05 | SLIDE SWITCH | MY | |
| ⚠ | TS1 | | | S59-1080-05 | THERMAL SWITCH | | |
| ⚠ | TS2 | | | S79-0020-05 | THERMAL SWITCH | | |
| | D1 -28 | | | HSS104A | DIODE | | |
| | D1 -28 | | | 1SS131 | DIODE | | |
| | D29 | | | HZS11N(B2) | ZENER DIODE | | |

**L** : Scandinavia **K** : USA **P** : Canada **R** : Mexico
**Y** : PX(Far East, Hawaii) **T** : Europe **E** : Europe **G** : Germany
**Y** : AAFES(Europe) **X** : Australia **M** : Other Areas **Q** : Russia

⚠ indicates safety critical components.



⁎ New Parts
Parts without **Parts No.** are not supplied.
Les articles non mentionnes dans le **Parts No.** ne sont pas fournis.
Teile ohne **Parts No.** werden nicht geliefert.

10

| | Ref. No | Add-ress | New Parts | Parts No. | Description | Desti-nation | Re-marks |
|---|---|---|---|---|---|---|---|
| | D29 | | | RD11ES(B2) | ZENER DIODE | | |
| | D30 | | | HZS15N(B2) | ZENER DIODE | | |
| | D30 | | | RD15ES(B2) | ZENER DIODE | | |
| | D31 | | | HSS104A | DIODE | | |
| | D31 | | | 1SS131 | DIODE | | |
| ⚠ | D32 ,33 | | | D5FB20-4002-L2 | DIODE | | |
| | D34 | | | HZS6.2N(B2) | ZENER DIODE | | |
| | D34 | | | RD6.2ES(B2) | ZENER DIODE | | |
| ⚠ | D35 -37 | | | HSS104A | DIODE | | |
| ⚠ | D35 -37 | | | 1SS131 | DIODE | | |
| | D38 -41 | | | S5688B | DIODE | | |
| | D38 -41 | | | 1SR139-400 | DIODE | | |
| | D42 | | | HZS2.7N(B2) | ZENER DIODE | | |
| | D42 | | | RD2.7ES(B2) | ZENER DIODE | | |
| | D43 | | | HSS104A | DIODE | | |
| | D43 | | | 1SS131 | DIODE | | |
| | D44 | | | HZS5.1S(B2) | ZENER DIODE | | |
| | D44 | | | RD5.1JS(B2) | ZENER DIODE | | |
| | D45 -47 | | | HSS104A | DIODE | | |
| | D45 -47 | | | 1SS131 | DIODE | | |
| ⚠ | Q1 -4 | | ⁎ | TRAITR4N*5 | TRANSISTOR | | |
| ⚠ | Q5 -8 | | ⁎ | TRAITR4P*5 | TRANSISTOR | | |
| | Q9 -12 | | | 2SC2631(R,S) | TRANSISTOR | | |
| | Q13 -16 | | | 2SA992(F,E) | TRANSISTOR | | |
| | Q17 | | ⁎ | TRAITR4N*5 | TRANSISTOR | | |
| | Q18 | | ⁎ | TRAITR4P*5 | TRANSISTOR | | |
| | Q19 | | | 2SC2631(R,S) | TRANSISTOR | | |
| | Q20 ,21 | | | 2SA992(F,E) | TRANSISTOR | | |
| | Q22 ,23 | | | 2SC1845(F,E) | TRANSISTOR | | |
| | Q24 | | | 2SD2012 | TRANSISTOR | | |
| ⚠ | Q24 | | | 2SD2061(E,F) | TRANSISTOR | | |
| | Q25 | | | DTC143TSA | DIGITAL TRANSISTOR | | |
| | Q25 | | | UN4216 | DIGITAL TRANSISTOR | | |
| | Q26 ,27 | | | DTC113ZSA | DIGITAL TRANSISTOR | | |
| | Q26 ,27 | | | UN4219 | DIGITAL TRANSISTOR | | |
| | Q28 | | | DTC124ESA | DIGITAL TRANSISTOR | | |
| | Q28 | | | UN4212 | DIGITAL TRANSISTOR | | |
| | Q29 -33 | | | DTC113ZSA | DIGITAL TRANSISTOR | | |
| | Q29 -33 | | | UN4219 | DIGITAL TRANSISTOR | | |
| | Q34 | | | 2SC2003(L,K) | TRANSISTOR | | |
| ⚠ | Q35 | | | 2SC3940A(R,S) | TRANSISTOR | | |
| ⚠ | Q35 | | | 2SD863(E,F) | TRANSISTOR | | |
| | Q36 | | | DTC124ESA | DIGITAL TRANSISTOR | | |
| | Q36 | | | UN4212 | DIGITAL TRANSISTOR | | |
| | Q37 | | | DTC143TSA | DIGITAL TRANSISTOR | | |
| | Q37 | | | UN4216 | DIGITAL TRANSISTOR | | |
| | Q38 | | | DTC124ESA | DIGITAL TRANSISTOR | | |
| | Q38 | | | UN4212 | DIGITAL TRANSISTOR | | |
| | **SURROUND UNIT (X08-273X-XX)** | | | | | | |
| | C1 ,2 | | | CC73FSL1H821J | CHIP C 820PF J | | |
| | C3 ,4 | | | CC73FSL1H181J | CHIP C 180PF J | | |
| | C5 ,6 | | | CQ93FMG1H332J | MYLAR 3300PF J | | |
| | C7 ,8 | | | CE04KW1E470M | ELECTRO 47UF 25WV | | |
| | C9 ,10 | | | CC73FSL1H101J | CHIP C 100PF J | | |

**L** : Scandinavia **K** : USA **P** : Canada **R** : Mexico
**Y** : PX(Far East, Hawaii) **T** : Europe **E** : Europe **G** : Germany
**Y** : AAFES(Europe) **X** : Australia **M** : Other Areas **Q** : Russia

⚠ indicates safety critical components.

# KR-V999D/1090VR
## PARTS LIST

* New Parts
Parts without **Parts No.** are not supplied.
Les articles non mentionnes dans le **Parts No.** ne sont pas fournis.
Teile ohne **Parts No.** werden nicht geliefert.

⑪

| Ref. No | Address | New Parts | Parts No. | Description | | | Destination | Remarks |
|---|---|---|---|---|---|---|---|---|
| C11 ,12 | | | CQ93FMG1H152J | MYLAR | 1500PF | J | | |
| C13 | | | CK73FB1H103K | CHIP C | 0.010UF | K | | |
| C14 | | | CK73FB1H102K | CHIP C | 1000PF | K | | |
| C15 ,16 | | | CE04KW1H220M | ELECTRO | 22UF | 50WV | | |
| C17 | | | CK73FB1H103K | CHIP C | 0.010UF | K | | |
| C18 | | | CK73FB1H102K | CHIP C | 1000PF | K | | |
| C19 | | | CC73FSL1H101J | CHIP C | 100PF | J | | |
| C21 ,22 | | | CC73FSL1H821J | CHIP C | 820PF | J | | |
| C23 | | | CC73FSL1H181J | CHIP C | 180PF | J | | |
| C24 | | | CQ93FMG1H471J | MYLAR | 470PF | J | | |
| C25 | | | CQ93FMG1H332J | MYLAR | 3300PF | J | | |
| C26 | | | CQ93FMG1H473J | MYLAR | 0.047UF | J | | |
| C27 | | | CQ93FMG1H152J | MYLAR | 1500PF | J | | |
| C28 | | | CQ93FMG1H183J | MYLAR | 0.018UF | J | | |
| C29 | | | CC73FSL1H101J | CHIP C | 100PF | J | | |
| C30 | | | CQ93FMG1H472J | MYLAR | 4700PF | J | | |
| C31 ,32 | | | CE04KW1H220M | ELECTRO | 22UF | 50WV | | |
| C33 | | | CK73FB1H103K | CHIP C | 0.010UF | K | | |
| C34 | | | CK73FB1H102K | CHIP C | 1000PF | K | | |
| C35 | | | CK73FB1H103K | CHIP C | 0.010UF | K | | |
| C36 | | | CK73FB1H102K | CHIP C | 1000PF | K | | |
| C37 ,38 | | | CE04KW1H100M | ELECTRO | 10UF | 50WV | | |
| C39 ,40 | | | CC73FSL1H121J | CHIP C | 120PF | J | | |
| C41 ,42 | | | CC73FSL1H821J | CHIP C | 820PF | J | | |
| C43 ,44 | | | CC73FSL1H181J | CHIP C | 180PF | J | | |
| C45 ,46 | | | CQ93FMG1H332J | MYLAR | 3300PF | J | | |
| C47 ,48 | | | CC73FSL1H101J | CHIP C | 100PF | J | | |
| C49 | | | CK73FB1H103K | CHIP C | 0.010UF | K | | |
| C50 | | | CK73FB1H102K | CHIP C | 1000PF | K | | |
| C51 ,52 | | | CQ93FMG1H152J | MYLAR | 1500PF | J | | |
| C53 | | | CK73FB1H103K | CHIP C | 0.010UF | K | | |
| C54 | | | CK73FB1H102K | CHIP C | 1000PF | K | | |
| C55 -60 | | | CE04KW1H100M | ELECTRO | 10UF | 50WV | | |
| C61 -64 | | | CF92FV1H224J | MF-C | 0.22UF | J | | |
| C65 ,66 | | | CC73FSL1H101J | CHIP C | 100PF | J | | |
| C67 ,68 | | | CE04KW1H4R7M | ELECTRO | 4.7UF | 50WV | | |
| C81 -84 | | | CF92FV1H224J | MF-C | 0.22UF | J | | |
| C85 ,86 | | | CC73FSL1H101J | CHIP C | 100PF | J | | |
| C87 ,88 | | | CE04KW1H4R7M | ELECTRO | 4.7UF | 50WV | | |
| C89 | | | CK73FB1H103K | CHIP C | 0.010UF | K | | |
| C90 | | | CK73FB1H102K | CHIP C | 1000PF | K | | |
| C91 | | | CK73FB1H103K | CHIP C | 0.010UF | K | | |
| C92 | | | CF92FV1H224J | MF-C | 0.22UF | J | | |
| C93 | | | CK73FB1H102K | CHIP C | 1000PF | K | | |
| C94 | | | CF92FV1H224J | MF-C | 0.22UF | J | | |
| C95 | | | CC73FSL1H101J | CHIP C | 100PF | J | | |
| C96 | | | CE04KW1H4R7M | ELECTRO | 4.7UF | 50WV | | |
| C97 | | | CC73FSL1H101J | CHIP C | 100PF | J | | |
| C98 | | | CC73FSL1H470J | CHIP C | 47PF | J | | |
| C99 | | | CF92FV1H564J | MF-C | 0.56UF | J | | |
| C100 | | | CF92FV1H274J | MF-C | 0.27UF | J | | |
| C101,102 | | | CE04KW1H220M | ELECTRO | 22UF | 50WV | | |
| C103,104 | | | CE04KW1E470M | ELECTRO | 47UF | 25WV | | |
| C105 | | | CF92FV1H274J | MF-C | 0.27UF | J | | |
| C106 | | | CE04KW1E470M | ELECTRO | 47UF | 25WV | | |

**L** : Scandinavia **K** : USA **P** : Canada **R** : Mexico
**Y** : PX(Far East, Hawaii) **T** : Europe **E** : Europe **G** : Germany
**Y** : AAFES(Europe) **X** : Australia **M** : Other Areas **Q** : Russia

⚠ indicates safety critical components.

* New Parts
Parts without **Parts No.** are not supplied.
Les articles non mentionnes dans le **Parts No.** ne sont pas fournis.
Teile ohne **Parts No.** werden nicht geliefert.

⑫

| Ref. No | Address | New Parts | Parts No. | Description | | | Destination | Remarks |
|---|---|---|---|---|---|---|---|---|
| C107,108 | | | CC73FCH1H220J | CHIP C | 22PF | J | | |
| C109 | | | CQ93FMG1H562J | MYLAR | 5600PF | J | | |
| C110-112 | | | CE04KW1E470M | ELECTRO | 47UF | 25WV | | |
| C113,114 | | | CC73FCH1H220J | CHIP C | 22PF | J | | |
| C115 | | | CQ93FMG1H562J | MYLAR | 5600PF | J | | |
| C116 | | | CE04KW1H220M | ELECTRO | 22UF | 50WV | | |
| C117,118 | | | CC73FSL1H121J | CHIP C | 120PF | J | | |
| C119,120 | | | CE04KW1E470M | ELECTRO | 47UF | 25WV | | |
| C121 | | | CK73FB1H102K | CHIP C | 1000PF | K | | |
| C122,123 | | | CK73FB1H103K | CHIP C | 0.010UF | K | | |
| C124 | | | CK73FB1H102K | CHIP C | 1000PF | K | | |
| C125 | | | CF92FV1H564J | MF-C | 0.56UF | J | | |
| C126 | | | CK73FB1E104K | CHIP C | 0.10UF | K | | |
| C156 | | | CE04KW1H220M | ELECTRO | 22UF | 50WV | | |
| C157 | | | CK73FB1H103K | CHIP C | 0.010UF | K | | |
| C158 | | | CK73FB1H102K | CHIP C | 1000PF | K | | |
| C159,160 | | | CE04KW1E470M | ELECTRO | 47UF | 25WV | | |
| C161 | | | CK73FB1H103K | CHIP C | 0.010UF | K | | |
| C162 | | | CK73FB1H102K | CHIP C | 1000PF | K | | |
| C163,164 | | | CC73FSL1H101J | CHIP C | 100PF | J | | |
| C165,166 | | | CE04KW1H100M | ELECTRO | 10UF | 50WV | | |
| C167,168 | | | CC73FSL1H821J | CHIP C | 820PF | J | | |
| C169 | | | CE04KW1H220M | ELECTRO | 22UF | 50WV | | |
| C170 | | | CK73FB1H102K | CHIP C | 1000PF | K | | |
| C171,172 | | | CC73FSL1H821J | CHIP C | 820PF | J | | |
| C173,174 | | | CC73FSL1H221J | CHIP C | 220PF | J | | |
| C181 | | | CK73FB1H103K | CHIP C | 0.010UF | K | | |
| C182 | | | CK73FB1H102K | CHIP C | 1000PF | K | | |
| C183 | | | CE04KW1H4R7M | ELECTRO | 4.7UF | 50WV | | |
| C184 | | | CC73FSL1H101J | CHIP C | 100PF | J | | |
| C185 | | | CK73FB1H103K | CHIP C | 0.010UF | K | | |
| C186 | | | CK73FB1H102K | CHIP C | 1000PF | K | | |
| C187 | | | CK73FB1H103K | CHIP C | 0.010UF | K | | |
| C188 | | | CK73FB1H102K | CHIP C | 1000PF | K | | |
| C189 | | | CK73FB1H103K | CHIP C | 0.010UF | K | | |
| C190 | | | CK73FB1H102K | CHIP C | 1000PF | K | | |
| C301 | | | CE04KW1A101M | ELECTRO | 100UF | 10WV | | |
| C302 | | | CE04KW1E470M | ELECTRO | 47UF | 25WV | | |
| C303,304 | | | CK73FB1H102K | CHIP C | 1000PF | K | | |
| C305,306 | | | CE04KW1A101M | ELECTRO | 100UF | 10WV | | |
| C307,308 | | | CK73FB1H102K | CHIP C | 1000PF | K | | |
| C309 | | | CE04KW1A101M | ELECTRO | 100UF | 10WV | | |
| C310 | | | CK73FB1H102K | CHIP C | 1000PF | K | | |
| C311 | | | CE04KW1A101M | ELECTRO | 100UF | 10WV | | |
| C312 | | | CK73FB1E104K | CHIP C | 0.10UF | K | | |
| C313 | | | CC73FCH1H102J | CHIP C | 1000PF | J | | |
| C314 | | | CK73FB1H822K | CHIP C | 8200PF | K | | |
| C315 | | | CC73FCH1H070D | CHIP C | 7.0PF | D | | |
| C316 | | | CC73FCH1H090D | CHIP C | 9.0PF | D | | |
| C317 | | | CK73FB1E104K | CHIP C | 0.10UF | K | | |
| C318 | | | CK73FB1H102K | CHIP C | 1000PF | K | | |
| C319 | | | CC73FSL1H221J | CHIP C | 220PF | J | | |
| C320 | | | CC73FCH1H090D | CHIP C | 9.0PF | D | | |
| C321 | | | CK73FB1H102K | CHIP C | 1000PF | K | | |
| C322 | | | CC73FCH1H070D | CHIP C | 7.0PF | D | | |

**L** : Scandinavia **K** : USA **P** : Canada **R** : Mexico
**Y** : PX(Far East, Hawaii) **T** : Europe **E** : Europe **G** : Germany
**Y** : AAFES(Europe) **X** : Australia **M** : Other Areas **Q** : Russia

⚠ indicates safety critical components.

# KR-V999D/1090VR

## PARTS LIST

⁎ New Parts
Parts without **Parts No.** are not supplied.
Les articles non mentionnes dans le **Parts No.** ne sont pas fournis.
Teile ohne **Parts No.** werden nicht geliefert.

⑬

| Ref. No | Add-ress | New Parts | Parts No. | Description | | | Desti-nation | Re-marks |
|---|---|---|---|---|---|---|---|---|
| C323-325 | | | CC73FCH1H220J | CHIP C | 22PF | J | | |
| C327 | | | CC73FCH1H090D | CHIP C | 9.0PF | D | | |
| C328 | | | CC73FCH1H070D | CHIP C | 7.0PF | D | | |
| C329 | | | CK73FB1H102K | CHIP C | 1000PF | K | | |
| C330 | | | CK73FB1E104K | CHIP C | 0.10UF | K | | |
| C331 | | | CC73FCH1H090D | CHIP C | 9.0PF | D | | |
| C332 | | | CC73FCH1H070D | CHIP C | 7.0PF | D | | |
| C333 | | | CK73FB1H822K | CHIP C | 8200PF | K | | |
| C334 | | | CK73FB1H103K | CHIP C | 0.010UF | K | | |
| C335 | | | CK73FB1E104K | CHIP C | 0.10UF | K | | |
| C336 | | | CK73FB1H103K | CHIP C | 0.010UF | K | | |
| C337 | | | CC73FSL1H101J | CHIP C | 100PF | J | | |
| C338,339 | | | CK73FB1H102K | CHIP C | 1000PF | K | | |
| C340 | | | CE04KW1A101M | ELECTRO | 100UF | 10WV | | |
| C341 | | | CK73FB1H102K | CHIP C | 1000PF | K | | |
| C342 | | | CE04KW1E470M | ELECTRO | 47UF | 25WV | | |
| C343 | | | CK73FB1E104K | CHIP C | 0.10UF | K | | |
| C344 | | | CK73FB1H103K | CHIP C | 0.010UF | K | | |
| C345 | | | CK73FB1H102K | CHIP C | 1000PF | K | | |
| C347,348 | | | CK73FB1H102K | CHIP C | 1000PF | K | | |
| C349 | | | CC73FCH1H220J | CHIP C | 22PF | J | | |
| C361-363 | | | CK73FB1E104K | CHIP C | 0.10UF | K | | |
| C364,365 | | | CC73FSL1H101J | CHIP C | 100PF | J | | |
| C366 | | | CE04KW1E470M | ELECTRO | 47UF | 25WV | | |
| C367 | | | CK73FF1C224Z | CHIP C | 0.22UF | Z | | |
| C368,369 | | | CK73FB1H102K | CHIP C | 1000PF | K | | |
| C370 | | | CC73FCH1H220J | CHIP C | 22PF | J | | |
| C371,372 | | | CC73FSL1H470J | CHIP C | 47PF | J | | |
| C373 | | | CK73FB1H102K | CHIP C | 1000PF | K | | |
| C374 | | | CE04KW1E470M | ELECTRO | 47UF | 25WV | | |
| C401,402 | | | CK73FB1E104K | CHIP C | 0.10UF | K | KP | |
| C403 | | | CK73FB1H103K | CHIP C | 0.010UF | K | | |
| C404 | | | CK73FB1H102K | CHIP C | 1000PF | K | KP | |
| C405,406 | | | CK73FB1E104K | CHIP C | 0.10UF | K | KP | |
| C407 | | | CK73FB1H102K | CHIP C | 1000PF | K | KP | |
| C501,502 | | | CE04KW1H100M | ELECTRO | 10UF | 50WV | | |
| C503 | | | CK73FB1H102K | CHIP C | 1000PF | K | | |
| C504 | | | CK73FB1H103K | CHIP C | 0.010UF | K | | |
| C505,506 | | | CE04KW1H4R7M | ELECTRO | 4.7UF | 50WV | | |
| C509,510 | | | CC73FSL1H151J | CHIP C | 150PF | J | | |
| C511,512 | | | CC73FSL1H101J | CHIP C | 100PF | J | | |
| C513,514 | | | CE04KW1H220M | ELECTRO | 22UF | 50WV | | |
| C515 | | | CK73FB1H102K | CHIP C | 1000PF | K | | |
| C516 | | | CK73FB1H103K | CHIP C | 0.010UF | K | | |
| C517,518 | | | CE04KW1H220M | ELECTRO | 22UF | 50WV | | |
| C519,520 | | | CC73FCH1H220J | CHIP C | 22PF | J | | |
| C521 | | | CK73FB1H102K | CHIP C | 1000PF | K | | |
| C522 | | | CK73FB1H103K | CHIP C | 0.010UF | K | | |
| C525-528 | | | CE04KW1H4R7M | ELECTRO | 4.7UF | 50WV | | |
| C529,530 | | | CC73FCH1H220J | CHIP C | 22PF | J | | |
| C533 | | | CK73FB1H102K | CHIP C | 1000PF | K | | |
| C534 | | | CK73FB1H103K | CHIP C | 0.010UF | K | | |
| C535-538 | | | CE04KW1H4R7M | ELECTRO | 4.7UF | 50WV | | |
| C539,540 | | | CC73FSL1H151J | CHIP C | 150PF | J | | |
| C541,542 | | | CC73FSL1H101J | CHIP C | 100PF | J | | |

**L** : Scandinavia **K** : USA **P** : Canada **R** : Mexico
**Y** : PX(Far East, Hawaii) **T** : Europe **E** : Europe **G** : Germany
**Y** : AAFES(Europe) **X** : Australia **M** : Other Areas **Q** : Russia

⚠ indicates safety critical components.

⁎ New Parts
Parts without **Parts No.** are not supplied.
Les articles non mentionnes dans le **Parts No.** ne sont pas fournis.
Teile ohne **Parts No.** werden nicht geliefert.

⑭

| Ref. No | Add-ress | New Parts | Parts No. | Description | | | Desti-nation | Re-marks |
|---|---|---|---|---|---|---|---|---|
| C543,544 | | | CE04KW1H220M | ELECTRO | 22UF | 50WV | | |
| C545 | | | CK73FB1H102K | CHIP C | 1000PF | K | | |
| C546 | | | CK73FB1H103K | CHIP C | 0.010UF | K | | |
| C547,548 | | | CE04KW1H220M | ELECTRO | 22UF | 50WV | | |
| C549,550 | | | CC73FCH1H220J | CHIP C | 22PF | J | | |
| C551 | | | CK73FB1H102K | CHIP C | 1000PF | K | | |
| C552 | | | CK73FB1H103K | CHIP C | 0.010UF | K | | |
| C553,554 | | | CE04KW1H0R1M | ELECTRO | 0.1UF | 50WV | | |
| C555,556 | | | CK73FB1H152K | CHIP C | 1500PF | K | | |
| C559,560 | | | CC73FCH1H220J | CHIP C | 22PF | J | | |
| C563 | | | CK73FB1H102K | CHIP C | 1000PF | K | | |
| C564 | | | CK73FB1H103K | CHIP C | 0.010UF | K | | |
| C565-568 | | | CE04KW1H4R7M | ELECTRO | 4.7UF | 50WV | | |
| C569,570 | | | CC73FSL1H151J | CHIP C | 150PF | J | | |
| C571,572 | | | CC73FSL1H101J | CHIP C | 100PF | J | | |
| C573,574 | | | CE04KW1H220M | ELECTRO | 22UF | 50WV | | |
| C575 | | | CK73FB1H102K | CHIP C | 1000PF | K | | |
| C576 | | | CK73FB1H103K | CHIP C | 0.010UF | K | | |
| C577,578 | | | CE04KW1H220M | ELECTRO | 22UF | 50WV | | |
| C579,580 | | | CC73FCH1H220J | CHIP C | 22PF | J | | |
| C581 | | | CK73FB1H102K | CHIP C | 1000PF | K | | |
| C582 | | | CK73FB1H103K | CHIP C | 0.010UF | K | | |
| C587,588 | | | CE04KW1H4R7M | ELECTRO | 4.7UF | 50WV | | |
| C589,590 | | | CC73FCH1H220J | CHIP C | 22PF | J | | |
| C593 | | | CK73FB1H102K | CHIP C | 1000PF | K | | |
| C594 | | | CK73FB1H103K | CHIP C | 0.010UF | K | | |
| C595-598 | | | CE04KW1H4R7M | ELECTRO | 4.7UF | 50WV | | |
| C599,600 | | | CC73FSL1H151J | CHIP C | 150PF | J | | |
| C601,602 | | | CC73FSL1H101J | CHIP C | 100PF | J | | |
| C603,604 | | | CE04KW1H220M | ELECTRO | 22UF | 50WV | | |
| C605 | | | CK73FB1H102K | CHIP C | 1000PF | K | | |
| C606 | | | CK73FB1H103K | CHIP C | 0.010UF | K | | |
| C607,608 | | | CE04KW1H220M | ELECTRO | 22UF | 50WV | | |
| C609,610 | | | CC73FCH1H220J | CHIP C | 22PF | J | | |
| C611 | | | CK73FB1H102K | CHIP C | 1000PF | K | | |
| C612 | | | CK73FB1H103K | CHIP C | 0.010UF | K | | |
| C619,620 | | | CC73FCH1H220J | CHIP C | 22PF | J | | |
| C701-712 | | | CC73FSL1H101J | CHIP C | 100PF | J | | |
| C713 | | | CK73FB1H102K | CHIP C | 1000PF | K | | |
| C714 | | | CK73FB1H103K | CHIP C | 0.010UF | K | | |
| C715 | | | CK73FB1H102K | CHIP C | 1000PF | K | | |
| C716 | | | CK73FB1H103K | CHIP C | 0.010UF | K | | |
| C717,718 | | | CC73FSL1H470J | CHIP C | 47PF | J | | |
| C801-812 | | | CC73FCH1H100D | CHIP C | 10PF | D | | |
| C813 | | | CK73EB1H104K | CHIP C | 0.10UF | K | | |
| C814 | | | CE04KW1H4R7M | ELECTRO | 4.7UF | 50WV | | |
| C815 | | | CK73EB1H104K | CHIP C | 0.10UF | K | | |
| C816 | | | CE04KW1H010M | ELECTRO | 1.0UF | 50WV | | |
| C817 | | | CK73EB1H104K | CHIP C | 0.10UF | K | | |
| C818 | | | CE04KW1H4R7M | ELECTRO | 4.7UF | 50WV | | |
| C901-903 | | | CK73FB1H102K | CHIP C | 1000PF | K | KP | |
| C904 | | | CC73FSL1H221J | CHIP C | 220PF | J | KP | |
| CN1 ,2 | | ⁎ | E40-9836-05 | SOCKET FOR PIN ASSY | | | | |
| CN51,52 | | ⁎ | E40-9836-05 | SOCKET FOR PIN ASSY | | | | |

**L** : Scandinavia **K** : USA **P** : Canada **R** : Mexico
**Y** : PX(Far East, Hawaii) **T** : Europe **E** : Europe **G** : Germany
**Y** : AAFES(Europe) **X** : Australia **M** : Other Areas **Q** : Russia

⚠ indicates safety critical components.

# KR-V999D/1090VR

## PARTS LIST

* New Parts
Parts without **Parts No.** are not supplied.
Les articles non mentionnes dans le **Parts No.** ne sont pas fournis.
Teile ohne **Parts No.** werden nicht geliefert.

15

| Ref. No | Add-ress | New Parts | Parts No. | Description | Desti-nation | Re-marks |
|---|---|---|---|---|---|---|
| J1 | | | E11-0200-05 | MINIATURE PHONE JACK(5P) | KP | |
| J2 | | | E11-0344-05 | MINIATURE PHONE JACK | KP | |
| J3 | | | E63-0174-05 | PHONO JACK | | |
| J71 ,72 | | | E63-0139-15 | PHONO JACK | | |
| J73 -75 | | | E11-0283-05 | MINIATURE PHONE JACK(3P) | KP | |
| L1 -7 | | | L92-0044-05 | FERRITE CORE | | |
| X1 | | | L78-0294-05 | RESONATOR (10.000M) | | |
| X2 | | * | L77-2194-05 | CRYSTAL RESONATOR(5.0M) | | |
| X3 | | * | L77-2192-05 | CRYSTAL RESONATOR(12.288M) | | |
| R1 ,2 | | | RK73FB2A103J | CHIP R 10K J 1/10W | | |
| R3 ,4 | | | RK73FB2A512J | CHIP R 5.1K J 1/10W | | |
| R5 ,6 | | | RK73FB2A912J | CHIP R 9.1K J 1/10W | | |
| R7 ,8 | | | RK73FB2A103J | CHIP R 10K J 1/10W | | |
| R13 ,14 | | | RK73FB2A512J | CHIP R 5.1K J 1/10W | | |
| R15 ,16 | | | RK73FB2A104J | CHIP R 100K J 1/10W | | |
| R17 ,18 | | | RK73FB2A473J | CHIP R 47K J 1/10W | | |
| R19 ,20 | | | RK73FB2A104J | CHIP R 100K J 1/10W | | |
| R21 ,22 | | | RK73FB2A103J | CHIP R 10K J 1/10W | | |
| R23 | | | RK73FB2A512J | CHIP R 5.1K J 1/10W | | |
| R24 | | | RK73FB2A822J | CHIP R 8.2K J 1/10W | | |
| R25 | | | RK73FB2A912J | CHIP R 9.1K J 1/10W | | |
| R26 | | | RK73FB2A182J | CHIP R 1.8K J 1/10W | | |
| R27 -29 | | | RK73FB2A103J | CHIP R 10K J 1/10W | | |
| R30 | | | RK73FB2A104J | CHIP R 100K J 1/10W | | |
| R31 | | | RK73FB2A103J | CHIP R 10K J 1/10W | | |
| R32 | | | RK73FB2A100J | CHIP R 10 J 1/10W | | |
| R33 | | | RK73FB2A512J | CHIP R 5.1K J 1/10W | | |
| R34 | | | RK73FB2A182J | CHIP R 1.8K J 1/10W | | |
| R35 ,36 | | | RK73FB2A104J | CHIP R 100K J 1/10W | | |
| R37 -40 | | | RK73FB2A471J | CHIP R 470 J 1/10W | | |
| R41 ,42 | | | RK73FB2A103J | CHIP R 10K J 1/10W | | |
| R43 ,44 | | | RK73FB2A512J | CHIP R 5.1K J 1/10W | | |
| R45 ,46 | | | RK73FB2A912J | CHIP R 9.1K J 1/10W | | |
| R47 ,48 | | | RK73FB2A103J | CHIP R 10K J 1/10W | | |
| R49 ,50 | | | RK73FB2A471J | CHIP R 470 J 1/10W | | |
| R51 | | | RK73FB2A103J | CHIP R 10K J 1/10W | | |
| R52 | | | RK73FB2A104J | CHIP R 100K J 1/10W | | |
| R53 ,54 | | | RK73FB2A512J | CHIP R 5.1K J 1/10W | | |
| R55 ,56 | | | RK73FB2A104J | CHIP R 100K J 1/10W | | |
| R57 -59 | | | RK73FB2A203J | CHIP R 20K J 1/10W | | |
| R61 ,62 | | | RK73FB2A104J | CHIP R 100K J 1/10W | | |
| R63 ,64 | | | RK73FB2A133J | CHIP R 13K J 1/10W | | |
| R65 ,66 | | | RK73FB2A622J | CHIP R 6.2K J 1/10W | | |
| R67 ,68 | | | RK73FB2A104J | CHIP R 100K J 1/10W | | |
| R81 ,82 | | | RK73FB2A104J | CHIP R 100K J 1/10W | | |
| R83 ,84 | | | RK73FB2A133J | CHIP R 13K J 1/10W | | |
| R85 ,86 | | | RK73FB2A622J | CHIP R 6.2K J 1/10W | | |
| R87 ,88 | | | RK73FB2A104J | CHIP R 100K J 1/10W | | |
| R89 ,90 | | | RK73FB2A203J | CHIP R 20K J 1/10W | | |
| R91 | | | RK73FB2A104J | CHIP R 100K J 1/10W | | |
| R92 | | | RK73FB2A622J | CHIP R 6.2K J 1/10W | | |
| R93 | | | RK73FB2A133J | CHIP R 13K J 1/10W | | |
| R94 ,95 | | | RK73FB2A104J | CHIP R 100K J 1/10W | | |
| R96 ,97 | | | RK73FB2A203J | CHIP R 20K J 1/10W | | |

**L** : Scandinavia **K** : USA **P** : Canada **R** : Mexico
**Y** : PX(Far East, Hawaii) **T** : Europe **E** : Europe **G** : Germany
**Y** : AAFES(Europe) **X** : Australia **M** : Other Areas **Q** : Russia

⚠ indicates safety critical components.

* New Parts
Parts without **Parts No.** are not supplied.
Les articles non mentionnes dans le **Parts No.** ne sont pas fournis.
Teile ohne **Parts No.** werden nicht geliefert.

16

| Ref. No | Add-ress | New Parts | Parts No. | Description | Desti-nation | Re-marks |
|---|---|---|---|---|---|---|
| R98 ,99 | | | RK73FB2A512J | CHIP R 5.1K J 1/10W | | |
| R111,112 | | | RK73FB2A104J | CHIP R 100K J 1/10W | | |
| R113,114 | | | RK73FB2A123J | CHIP R 12K J 1/10W | | |
| R115,116 | | | RK73FB2A203J | CHIP R 20K J 1/10W | | |
| R117,118 | | | RK73FB2A104J | CHIP R 100K J 1/10W | | |
| R119,120 | | | RK73FB2A103J | CHIP R 10K J 1/10W | | |
| R121,122 | | | RK73FB2A222J | CHIP R 2.2K J 1/10W | | |
| R123,124 | | | RK73FB2A123J | CHIP R 12K J 1/10W | | |
| R125-128 | | | RK73FB2A222J | CHIP R 2.2K J 1/10W | | |
| R129,130 | | | RK73FB2A103J | CHIP R 10K J 1/10W | | |
| R131-135 | | | RK73FB2A104J | CHIP R 100K J 1/10W | | |
| R136 | | | RK73FB2A103J | CHIP R 10K J 1/10W | | |
| R137,138 | | | RK73FB2A512J | CHIP R 5.1K J 1/10W | | |
| R151,152 | | | RK73FB2A104J | CHIP R 100K J 1/10W | | |
| R153,154 | | | RK73FB2A222J | CHIP R 2.2K J 1/10W | | |
| R155,156 | | | RK73FB2A123J | CHIP R 12K J 1/10W | | |
| R157,158 | | | RK73FB2A203J | CHIP R 20K J 1/10W | | |
| R159,160 | | | RK73FB2A123J | CHIP R 12K J 1/10W | | |
| R161-164 | | | RK73FB2A472J | CHIP R 4.7K J 1/10W | | |
| R165,166 | | | RK73FB2A331J | CHIP R 330 J 1/10W | | |
| R300 | | | RK73FB2A101J | CHIP R 100 J 1/10W | | |
| R301 | | | RK73FB2A105J | CHIP R 1.0M J 1/10W | | |
| R303 | | | RK73FB2A100J | CHIP R 10 J 1/10W | | |
| R304-307 | | | RK73FB2A101J | CHIP R 100 J 1/10W | | |
| R308 | | | RK73FB2A104J | CHIP R 100K J 1/10W | | |
| R309-313 | | | RK73FB2A101J | CHIP R 100 J 1/10W | | |
| R314-316 | | | RK73FB2A102J | CHIP R 1.0K J 1/10W | | |
| R317-319 | | | RK73FB2A101J | CHIP R 100 J 1/10W | | |
| R320 | | | RK73FB2A473J | CHIP R 47K J 1/10W | | |
| R321-323 | | | RK73FB2A101J | CHIP R 100 J 1/10W | | |
| R324 | | | RK73FB2A102J | CHIP R 1.0K J 1/10W | | |
| R325-328 | | | RK73FB2A101J | CHIP R 100 J 1/10W | | |
| R329 | | | RK73FB2A104J | CHIP R 100K J 1/10W | | |
| R330 | | | RK73FB2A101J | CHIP R 100 J 1/10W | | |
| R331 | | | RK73FB2A104J | CHIP R 100K J 1/10W | | |
| R332 | | | RK73FB2A105J | CHIP R 1.0M J 1/10W | | |
| R333 | | | RK73FB2A104J | CHIP R 100K J 1/10W | | |
| R334,335 | | | RK73FB2A101J | CHIP R 100 J 1/10W | | |
| R336-345 | | | RK73FB2A104J | CHIP R 100K J 1/10W | | |
| R346,347 | | | RK73FB2A101J | CHIP R 100 J 1/10W | | |
| R348 | | | RK73FB2A104J | CHIP R 100K J 1/10W | | |
| R349,350 | | | RK73FB2A101J | CHIP R 100 J 1/10W | | |
| R351-376 | | | RK73FB2A104J | CHIP R 100K J 1/10W | | |
| R377-379 | | | RK73FB2A101J | CHIP R 100 J 1/10W | | |
| R380-382 | | | RK73FB2A104J | CHIP R 100K J 1/10W | | |
| R384,385 | | | RK73FB2A750J | CHIP R 75 J 1/10W | | |
| R387-398 | | | RK73FB2A104J | CHIP R 100K J 1/10W | | |
| R399 | | | RK73FB2A750J | CHIP R 75 J 1/10W | | |
| R400-402 | | | RD14NB2E471J | RD 470 J 1/4W | KP | |
| R403 | | | RK73FB2A102J | CHIP R 1.0K J 1/10W | KP | |
| R404 | | | RD14NB2E470J | RD 47 J 1/4W | KP | |
| R405 | | | RK73FB2A102J | CHIP R 1.0K J 1/10W | KP | |
| R406-408 | | | RK73FB2A102J | CHIP R 1.0K J 1/10W | | |
| R409 | | | RK73FB2A101J | CHIP R 100 J 1/10W | | |
| R410-413 | | | RK73FB2A223J | CHIP R 22K J 1/10W | KP | |

**L** : Scandinavia **K** : USA **P** : Canada **R** : Mexico
**Y** : PX(Far East, Hawaii) **T** : Europe **E** : Europe **G** : Germany
**Y** : AAFES(Europe) **X** : Australia **M** : Other Areas **Q** : Russia

⚠ indicates safety critical components.

⁎ New Parts
Parts without **Parts No.** are not supplied.
Les articles non mentionnes dans le **Parts No.** ne sont pas fournis.
Teile ohne **Parts No.** werden nicht geliefert.

⑰

| Ref. No | Address | New Parts | Parts No. | Description | | | | Destination | Remarks |
|---|---|---|---|---|---|---|---|---|---|
| R414 | | | RK73FB2A102J | CHIP R | 1.0K | J | 1/10W | KP | |
| R501,502 | | | RK73FB2A104J | CHIP R | 100K | J | 1/10W | | |
| R503,504 | | | RK73FB2A105J | CHIP R | 1.0M | J | 1/10W | | |
| R505,506 | | | RK73FB2A104J | CHIP R | 100K | J | 1/10W | | |
| R507,508 | | | RK73FB2A102J | CHIP R | 1.0K | J | 1/10W | | |
| R509,510 | | | RK73FB2A224J | CHIP R | 220K | J | 1/10W | | |
| R511-514 | | | RK73FB2A104J | CHIP R | 100K | J | 1/10W | | |
| R515,516 | | | RK73FB2A222J | CHIP R | 2.2K | J | 1/10W | | |
| R517,518 | | | RK73FB2A102J | CHIP R | 1.0K | J | 1/10W | | |
| R519,520 | | | RK73FB2A133J | CHIP R | 13K | J | 1/10W | | |
| R521,522 | | | RK73FB2A222J | CHIP R | 2.2K | J | 1/10W | | |
| R523,524 | | | RK73FB2A272J | CHIP R | 2.7K | J | 1/10W | KPYCM | |
| R523,524 | | | RK73FB2A362J | CHIP R | 3.6K | J | 1/10W | TEQ | |
| R529,530 | | | RK73FB2A244J | CHIP R | 240K | J | 1/10W | | |
| R531,532 | | | RK73FB2A100J | CHIP R | 10 | J | 1/10W | | |
| R533,534 | | | RK73FB2A105J | CHIP R | 1.0M | J | 1/10W | | |
| R535,536 | | | RK73FB2A184J | CHIP R | 180K | J | 1/10W | | |
| R537,538 | | | RK73FB2A102J | CHIP R | 1.0K | J | 1/10W | | |
| R539,540 | | | RK73FB2A241J | CHIP R | 240 | J | 1/10W | | |
| R541-544 | | | RK73FB2A104J | CHIP R | 100K | J | 1/10W | | |
| R545,546 | | | RK73FB2A222J | CHIP R | 2.2K | J | 1/10W | | |
| R547,548 | | | RK73FB2A102J | CHIP R | 1.0K | J | 1/10W | | |
| R549,550 | | | RK73FB2A334J | CHIP R | 330K | J | 1/10W | | |
| R551,552 | | | RK73FB2A822J | CHIP R | 8.2K | J | 1/10W | | |
| R553,554 | | | RK73FB2A133J | CHIP R | 13K | J | 1/10W | | |
| R555,556 | | | RK73FB2A272J | CHIP R | 2.7K | J | 1/10W | KPYCM | |
| R555,556 | | | RK73FB2A362J | CHIP R | 3.6K | J | 1/10W | TEQ | |
| R557,558 | | | RK73FB2A222J | CHIP R | 2.2K | J | 1/10W | | |
| R559,560 | | | RK73FB2A244J | CHIP R | 240K | J | 1/10W | | |
| R563,564 | | | RK73FB2A105J | CHIP R | 1.0M | J | 1/10W | | |
| R565,566 | | | RK73FB2A184J | CHIP R | 180K | J | 1/10W | | |
| R567,568 | | | RK73FB2A102J | CHIP R | 1.0K | J | 1/10W | | |
| R569,570 | | | RK73FB2A241J | CHIP R | 240 | J | 1/10W | | |
| R571-574 | | | RK73FB2A104J | CHIP R | 100K | J | 1/10W | | |
| R575,576 | | | RK73FB2A222J | CHIP R | 2.2K | J | 1/10W | | |
| R577,578 | | | RK73FB2A102J | CHIP R | 1.0K | J | 1/10W | | |
| R583,584 | | | RK73FB2A133J | CHIP R | 13K | J | 1/10W | | |
| R585,586 | | | RK73FB2A272J | CHIP R | 2.7K | J | 1/10W | KPYCM | |
| R585,586 | | | RK73FB2A362J | CHIP R | 3.6K | J | 1/10W | TEQ | |
| R587,588 | | | RK73FB2A222J | CHIP R | 2.2K | J | 1/10W | | |
| R589,590 | | | RK73FB2A244J | CHIP R | 240K | J | 1/10W | | |
| R593,594 | | | RK73FB2A105J | CHIP R | 1.0M | J | 1/10W | | |
| R595,596 | | | RK73FB2A184J | CHIP R | 180K | J | 1/10W | | |
| R597,598 | | | RK73FB2A102J | CHIP R | 1.0K | J | 1/10W | | |
| R599,600 | | | RK73FB2A241J | CHIP R | 240 | J | 1/10W | | |
| R601-604 | | | RK73FB2A104J | CHIP R | 100K | J | 1/10W | | |
| R605,606 | | | RK73FB2A222J | CHIP R | 2.2K | J | 1/10W | | |
| R607,608 | | | RK73FB2A102J | CHIP R | 1.0K | J | 1/10W | | |
| R613,614 | | | RK73FB2A133J | CHIP R | 13K | J | 1/10W | | |
| R615,616 | | | RK73FB2A272J | CHIP R | 2.7K | J | 1/10W | KPYCM | |
| R615,616 | | | RK73FB2A362J | CHIP R | 3.6K | J | 1/10W | TEQ | |
| R617,618 | | | RK73FB2A222J | CHIP R | 2.2K | J | 1/10W | | |
| R619,620 | | | RK73FB2A244J | CHIP R | 240K | J | 1/10W | | |
| R701,702 | | | RK73FB2A221J | CHIP R | 220 | J | 1/10W | | |
| R703,704 | | | RK73FB2A224J | CHIP R | 220K | J | 1/10W | | |

**L** : Scandinavia **K** : USA **P** : Canada **R** : Mexico
**Y** : PX(Far East, Hawaii) **T** : Europe **E** : Europe **G** : Germany
**Y** : AAFES(Europe) **X** : Australia **M** : Other Areas **Q** : Russia

⚠ indicates safety critical components.

⁎ New Parts
Parts without **Parts No.** are not supplied.
Les articles non mentionnes dans le **Parts No.** ne sont pas fournis.
Teile ohne **Parts No.** werden nicht geliefert.

⑱

| Ref. No | Address | New Parts | Parts No. | Description | | | | Destination | Remarks |
|---|---|---|---|---|---|---|---|---|---|
| R705,706 | | | RK73FB2A102J | CHIP R | 1.0K | J | 1/10W | | |
| R707,708 | | | RK73FB2A224J | CHIP R | 220K | J | 1/10W | | |
| R709,710 | | | RK73FB2A221J | CHIP R | 220 | J | 1/10W | | |
| R711,712 | | | RK73FB2A104J | CHIP R | 100K | J | 1/10W | | |
| R713,714 | | | RK73FB2A102J | CHIP R | 1.0K | J | 1/10W | | |
| R715,716 | | | RK73FB2A104J | CHIP R | 100K | J | 1/10W | | |
| R717,718 | | | RK73FB2A102J | CHIP R | 1.0K | J | 1/10W | | |
| R719,720 | | | RK73FB2A104J | CHIP R | 100K | J | 1/10W | | |
| R721,722 | | | RK73FB2A102J | CHIP R | 1.0K | J | 1/10W | | |
| R723,724 | | | RK73FB2A104J | CHIP R | 100K | J | 1/10W | | |
| R725-728 | | | RK73FB2A103J | CHIP R | 10K | J | 1/10W | | |
| R801-814 | | | RK73FB2A473J | CHIP R | 47K | J | 1/10W | | |
| R815 | | | RK73FB2A562J | CHIP R | 5.6K | J | 1/10W | | |
| R816,817 | | | RK73FB2A473J | CHIP R | 47K | J | 1/10W | | |
| R818 | | | RK73FB2A562J | CHIP R | 5.6K | J | 1/10W | | |
| R819,820 | | | RK73FB2A473J | CHIP R | 47K | J | 1/10W | | |
| R821 | | | RK73FB2A562J | CHIP R | 5.6K | J | 1/10W | | |
| R902 | | | RK73FB2A913J | CHIP R | 91K | J | 1/10W | KP | |
| R903 | | | RK73FB2A223J | CHIP R | 22K | J | 1/10W | KP | |
| R904-906 | | | RD14NB2E471J | RD | 470 | J | 1/4W | KP | |
| D1 ,2 | | | DA204K | DIODE | | | | | |
| D3 -5 | | | MA110 | DIODE | | | | | |
| D6 | | | DA204K | DIODE | | | | | |
| D41 | | | DA204K | DIODE | | | | | |
| D501 | | | DA204K | DIODE | | | | | |
| D502-504 | | | MA110 | DIODE | | | | | |
| D701 | | | DA204K | DIODE | | | | | |
| D702,703 | | | MA110 | DIODE | | | | | |
| D704 | | | MA110 | DIODE | | | | KP | |
| D801-803 | | * | UDZ18B | ZENER DIODE | | | | | |
| IC1 -16 | | | NJM4580E | ANALOGUE IC | | | | | |
| IC1 -16 | | | NJM4580ED | ANALOGUE IC | | | | | |
| IC17 | | | TC9163AF | MOS-IC | | | | | |
| IC18 | | | TC9162AF | MOS-IC | | | | | |
| IC19,20 | | | TC7W00FU | MOS-IC | | | | | |
| IC31 | | | TA7805S | IC(VOLTAGE REGULATOR/ +5V) | | | | | |
| IC31 | | | UPC7805AHF | ANALOGUE IC | | | | | |
| IC32 | | * | UPD78016FGC522 | MI-COM IC | | | | | |
| IC33 | | * | DSPF56009FJ81 | MOS-IC | | | | | |
| IC34 | | * | CS4226-KQ | MOS-IC | | | | | |
| IC35 | | | TC74HCU04AF | IC(HEX INVERTER SMD) | | | | | |
| IC36 | | * | LH64256CK-70 | MEMORY IC | | | | | |
| IC37,38 | | | TA7805S | IC(VOLTAGE REGULATOR/ +5V) | | | | | |
| IC37,38 | | | UPC7805AHF | ANALOGUE IC | | | | | |
| IC39 | | | TC74HCU04AF | IC(HEX INVERTER SMD) | | | | | |
| IC51 | | * | TC9412AP | MOS-IC | | | | | |
| IC52,53 | | | NJM4580E | ANALOGUE IC | | | | | |
| IC52,53 | | | NJM4580ED | ANALOGUE IC | | | | | |
| IC54 | | * | TC9412AP | MOS-IC | | | | | |
| IC55,56 | | | NJM4580E | ANALOGUE IC | | | | | |
| IC55,56 | | | NJM4580ED | ANALOGUE IC | | | | | |
| IC57 | | * | TC9412AP | MOS-IC | | | | | |
| IC58,59 | | | NJM4580E | ANALOGUE IC | | | | | |
| IC58,59 | | | NJM4580ED | ANALOGUE IC | | | | | |
| IC60 | | * | TC9412AP | MOS-IC | | | | | |

**L** : Scandinavia **K** : USA **P** : Canada **R** : Mexico
**Y** : PX(Far East, Hawaii) **T** : Europe **E** : Europe **G** : Germany
**Y** : AAFES(Europe) **X** : Australia **M** : Other Areas **Q** : Russia

⚠ indicates safety critical components.

# KR-V999D/1090VR

## PARTS LIST

* New Parts
Parts without **Parts No.** are not supplied.
Les articles non mentionnes dans le **Parts No.** ne sont pas fournis.
Teile ohne **Parts No.** werden nicht geliefert.

19

| Ref. No | Address | New Parts | Parts No. | Description | | | Destination | Remarks |
|---|---|---|---|---|---|---|---|---|
| IC61,62 | | | NJM4580E | ANALOGUE IC | | | | |
| IC61,62 | | | NJM4580ED | ANALOGUE IC | | | | |
| IC71,72 | | | TC9163AF | MOS-IC | | | | |
| Q1 -3 | | | DTC124EUA | DIGITAL TRANSISTOR | | | KP | |
| Q1 -3 | | | UN5212 | DIGITAL TRANSISTOR | | | KP | |
| Q4 ,5 | | | DTA124EUA | DIGITAL TRANSISTOR | | | KP | |
| Q4 ,5 | | | UN5112 | DIGITAL TRANSISTOR | | | KP | |
| Q501-516 | | | 2SC4213(B) | TRANSISTOR | | | | |
| Q517 | | | DTC124EUA | DIGITAL TRANSISTOR | | | KP | |
| Q517 | | | UN5212 | DIGITAL TRANSISTOR | | | KP | |
| Q518 | | | 2SB1308(Q,R) | TRANSISTOR | | | KP | |
| Q801-803 | | | DTC113ZUA | DIGITAL TRANSISTOR | | | | |
| Q801-803 | | | UN5219 | DIGITAL TRANSISTOR | | | | |
| A1 | | | W02-1181-05 | OPTIC RECEIVING MODULE | | | | |
| **SUB CIRCUIT UNIT (X13-747X-XX)** | | | | | | | | |
| C203,204 | | * | CK45FB1H222KMM | CERAMIC | 2200PF | K | | |
| C205,206 | | | CE04KW1E470M | ELECTRO | 47UF | 25WV | | |
| C207,208 | | | CK45FF1H103ZMM | CERAMIC | 0.010UF | Z | | |
| C209 | | | CE04KW1V100M | ELECTRO | 10UF | 35WV | | |
| C221 | | | CE04KW1V100M | ELECTRO | 10UF | 35WV | | |
| C223 | | | CE04KW1A101M | ELECTRO | 100UF | 10WV | | |
| C224 | | | CF92FV1H104J | MF-C | 0.10UF | J | | |
| C225 | | | CE04KW1V100M | ELECTRO | 10UF | 35WV | | |
| C226 | | | CE04KW1E470M | ELECTRO | 47UF | 25WV | | |
| C227 | | | CE04KW1A101M | ELECTRO | 100UF | 10WV | | |
| C228 | | | CF92FV1H104J | MF-C | 0.10UF | J | | |
| C229 | | | CE04KW1E470M | ELECTRO | 47UF | 25WV | | |
| C231,232 | | | CE04KW1H100M | ELECTRO | 10UF | 50WV | | |
| C233,234 | | | CK45FF1H103ZMM | CERAMIC | 0.010UF | Z | | |
| C235,236 | | | CE04KW1H100M | ELECTRO | 10UF | 50WV | | |
| C237,238 | | | CK45FF1H103ZMM | CERAMIC | 0.010UF | Z | | |
| C239 | | | CE04KW1H100M | ELECTRO | 10UF | 50WV | | |
| C240,241 | | | CF92FV1H104J | MF-C | 0.10UF | J | | |
| C242,243 | | | CE04KW1H100M | ELECTRO | 10UF | 50WV | | |
| C251,252 | | | CE04KW1E470M | ELECTRO | 47UF | 25WV | | |
| C253 | | | CF92FV1H104J | MF-C | 0.10UF | J | | |
| C254,255 | | | CE04KW1E470M | ELECTRO | 47UF | 25WV | | |
| C256 | | | CF92FV1H333J | MF-C | 0.033UF | J | KP | |
| C301 | | | CE04KW1H010M | ELECTRO | 1.0UF | 50WV | | |
| C302 | | | CE04KW0J221M | ELECTRO | 220UF | 6.3WV | | |
| C303 | | | C90-1826-05 | BACKUP-C | 0.047F | 5.5WV | | |
| C304 | | | CK45FF1H103ZMM | CERAMIC | 0.010UF | Z | | |
| C306 | | | CE04KW1H010M | ELECTRO | 1.0UF | 50WV | | |
| C307,308 | | * | CK45FF1H103ZMM | CERAMIC | 0.010UF | Z | | |
| C321 | | * | CK45FF1H103ZMM | CERAMIC | 0.010UF | Z | | |
| C322,323 | | * | CK45FB1H102KMM | CERAMIC | 1000PF | K | | |
| C324 | | * | CK45FF1H103ZMM | CERAMIC | 0.010UF | Z | | |
| C351,352 | | * | CC45FSL1H221JN | CERAMIC | 220PF | J | | |
| C353 | | * | CK45FF1H103ZMM | CERAMIC | 0.010UF | Z | | |
| C401-405 | | | CE04KW1V102M | ELECTRO | 1000UF | 35WV | | |
| C406 | | | CE04KW1J471M | ELECTRO | 470UF | 63WV | | |
| C407 | | | CE04KW1V471M | ELECTRO | 470UF | 35WV | | |
| C408 | | | CK45FF1H103ZMM | CERAMIC | 0.010UF | Z | | |
| C409,410 | | | CE04KW1C222M | ELECTRO | 2200UF | 16WV | | |

**L** : Scandinavia **K** : USA **P** : Canada **R** : Mexico
**Y** : PX(Far East, Hawaii) **T** : Europe **E** : Europe **G** : Germany
**Y** : AAFES(Europe) **X** : Australia **M** : Other Areas **Q** : Russia

⚠ indicates safety critical components.

* New Parts
Parts without **Parts No.** are not supplied.
Les articles non mentionnes dans le **Parts No.** ne sont pas fournis.
Teile ohne **Parts No.** werden nicht geliefert.

20

| Ref. No | Address | New Parts | Parts No. | Description | | | | Destination | Remarks |
|---|---|---|---|---|---|---|---|---|---|
| C412,413 | | * | CK45FF1H103ZMM | CERAMIC | 0.010UF | Z | | | |
| C415-417 | | | CK45FE2H103PMM | CERAMIC | 0.010UF | P | | | |
| C420 | | | CK45FE2H103PMM | CERAMIC | 0.010UF | P | | | |
| ⚠ C421 | | | C91-1488-05 | MF | 6800PF | 250VAC | | MCTEQ | |
| C431 | | | CK45FB1H471KMM | CERAMIC | 470PF | K | | | |
| C432 | | | CE04KW1H100M | ELECTRO | 10UF | 50WV | | | |
| CN101,102 | | | E40-9853-05 | PIN ASSY | | | | | |
| CN103 | | | E40-9849-05 | PIN ASSY | | | | | |
| CN104 | | | E40-9847-05 | PIN ASSY | | | | | |
| CN105,106 | | | E40-9853-05 | PIN ASSY | | | | | |
| CN107 | | | E40-9849-05 | PIN ASSY | | | | | |
| CN108 | | | E40-9848-05 | PIN ASSY | | | | | |
| CN109 | | | E40-9847-05 | PIN ASSY | | | | | |
| CN110 | | * | E40-9846-05 | PIN ASSY | | | | | |
| CN111 | | | E40-4804-05 | SOCKET FOR PIN ASSY | | | | | |
| CN401 | | | E40-4808-05 | PIN ASSY | | | | | |
| CN402 | | | E40-4294-05 | FLAT CABLE CONNECTOR | | | | | |
| CN403 | | | E40-4295-05 | FLAT CABLE CONNECTOR | | | | | |
| J301 | | | E11-0293-05 | MINIATURE PHONE JACK(2P ﾀﾃ) | | | | | |
| ⚠ F11 -13 | | | F05-1222-05 | FUSE (SEMKO) | (250V T1.25A L) | | | MYCTEQ | |
| ⚠ F11 -13 | | | F50-0067-05 | FUSE(5X20) | | | | KP | |
| ⚠ F14 | | | F05-5016-05 | FUSE (SEMKO) | (250V T500MA) | | | MYCTEQ | |
| ⚠ F14 | | | F50-0066-05 | FUSE(5X20) | | | | KP | |
| ⚠ F15 ,16 | | | F05-1623-05 | FUSE (SEMKO) | (250V T1.6AL) | | | MYCTEQ | |
| ⚠ F15 ,16 | | * | F50-0068-05 | FUSE(5X20) | | | | KP | |
| ⚠ F17 | | | F05-1222-05 | FUSE (SEMKO) | (250V T1.25A L) | | | MYCTEQ | |
| ⚠ F17 | | | F50-0067-05 | FUSE(5X20) | | | | KP | |
| CN411-424 | | | J13-0075-05 | FUSE CLIP | | | | | |
| L101 | | | L40-1021-14 | SMALL FIXED INDUCTOR(1.0MH,K) | | | | KP | |
| L108 | | | L92-0044-05 | FERRITE CORE | | | | | |
| X1 | | | L78-0267-05 | RESONATOR | (4.194MHZ) | | | | |
| CP1 ,2 | | | R90-0803-05 | MULTI-COMP | 100KX7 | J | 1/4W | | |
| CP3 | | | R90-0500-05 | MULTI-COMP | 100KX6 | J | 1/4W | | |
| CP4 | | | R90-0855-05 | MULTI-COMP | 100KX5 | J | | | |
| CP5 | | | R90-0851-05 | MULTI-COMP | 100KX11 | | | | |
| CP6 | | | R90-0482-05 | MULTI-COMP | 100KX4 | J | 1/6W | | |
| ⚠ R207 | | * | RD14NB2E1R8J | RD | 1.8 | J | 1/4W | | |
| ⚠ R208 | | | RD14NB2E2R7J | RD | 2.7 | J | 1/4W | | |
| R211,212 | | | RD14NB2E102J | RD | 1.0K | J | 1/4W | | |
| R215,216 | | | RD14NB2E221J | RD | 220 | J | 1/4W | | |
| R231 | | | RD14NB2E471J | RD | 470 | J | 1/4W | | |
| R232 | | | RD14NB2E681J | RD | 680 | J | 1/4W | | |
| ⚠ R233,234 | | | RD14NB2E2R2J | RD | 2.2 | J | 1/4W | | |
| R401 | | | RD14NB2E4R7J | RD | 4.7 | J | 1/4W | KP | |
| ⚠ R402 | | * | RS14KB3A472JFR | FL-PROOF RS | 4.7K | J | 1W | | |
| R411,412 | | | RD14NB2E102J | RD | 1.0K | J | 1/4W | | |
| R413 | | | RD14NB2E6R8J | RD | 6.8 | J | 1/4W | | |
| ⚠ R414 | | | RD14NB2E100J | RD | 10 | J | 1/4W | | |
| R415 | | | RD14NB2E681J | RD | 680 | J | 1/4W | | |
| ⚠ S1 | | | S40-1138-05 | PUSH SWITCH (POWER TYPE) | | | | MCTEQ | |
| D201,202 | | | HZS15S(B) | ZENER DIODE | | | | | |

**L** : Scandinavia **K** : USA **P** : Canada **R** : Mexico
**Y** : PX(Far East, Hawaii) **T** : Europe **E** : Europe **G** : Germany
**Y** : AAFES(Europe) **X** : Australia **M** : Other Areas **Q** : Russia

⚠ indicates safety critical components.

# KR-V999D/1090VR

## PARTS LIST

* New Parts
Parts without **Parts No.** are not supplied.
Les articles non mentionnes dans le **Parts No.** ne sont pas fournis.
Teile ohne **Parts No.** werden nicht geliefert.

29

| Ref. No | Add-ress | New Parts | Parts No. | Description | Desti-nation | Re-marks |
|---|---|---|---|---|---|---|
| C318 | | | CE04KW1C331M | ELECTRO 330UF 16WV | MYCTEQ | |
| C319 | | * | CK45FF1H103ZMM | CERAMIC 0.010UF Z | MYCTEQ | |
| C320,321 | | * | CK45FF1H103ZMM | CERAMIC 0.010UF Z | | |
| C322-324 | | * | CC45FSL1H101JN | CERAMIC 100PF J | MYCTEQ | |
| C325 | | | CE04KW1H100M | ELECTRO 10UF 50WV | | |
| C326 | | * | CK45FF1H103ZMM | CERAMIC 0.010UF Z | | |
| C327 | | | CE04KW1H100M | ELECTRO 10UF 50WV | | |
| C328 | | * | CK45FF1H103ZMM | CERAMIC 0.010UF Z | | |
| C329 | | * | CC45FSL1H100DN | CERAMIC 10PF D | | |
| TC201 | | | C05-0097-05 | CERAMIC TRIMMER CAPACITOR(30PF | | |
| TC202 | | | C05-0097-05 | CERAMIC TRIMMER CAPACITOR(30PF | MYCTEQ | |
| CN1 | | | E40-9832-05 | SOCKET FOR PIN ASSY | | |
| CN2 | | | E40-9830-05 | SOCKET FOR PIN ASSY | | |
| CN201 | | | E40-9831-05 | SOCKET FOR PIN ASSY | | |
| CN202 | | | E40-9832-05 | SOCKET FOR PIN ASSY | | |
| J1 ,2 | | | E63-0139-15 | PHONO JACK | | |
| J3 ,4 | | | E63-0169-05 | PHONO JACK | | |
| J201 | | | E63-0162-05 | PHONO JACK | | |
| J202 | | | E63-0163-05 | PHONO JACK | | |
| L201 | | | L40-2201-17 | SMALL FIXED INDUCTOR(22UH,K) | | |
| L202 | | | L40-2201-17 | SMALL FIXED INDUCTOR(22UH,K) | MYCTEQ | |
| X201 | | * | L77-2201-05 | CRYSTAL RESONATOR(14.31818M) | | |
| X202 | | | L78-0272-05 | RESONATOR (503.5K) | | |
| X203 | | * | L77-2202-05 | CRYSTAL RESONATOR(17.73447M) | MYCTEQ | |
| X204 | | | L78-0300-05 | RESONATOR (500K) | MYCTEQ | |
| ⚠ R317 | | | RD14NB2E470J | RD 47 J 1/4W | MYCTEQ | |
| ⚠ R326 | | | RD14NB2E100J | RD 10 J 1/4W | | |
| ⚠ R327 | | | RD14NB2E100J | RD 10 J 1/4W | MYCTEQ | |
| ⚠ R328 | | | RD14NB2E4R7J | RD 4.7 J 1/4W | | |
| D11 -13 | | | HSS104 | DIODE | | |
| D11 -13 | | | 1SS133 | DIODE | | |
| D201,202 | | | HSS104 | DIODE | MYCTEQ | |
| D201,202 | | | 1SS133 | DIODE | MYCTEQ | |
| IC1 -6 | | | NJM4580D | IC(OP AMP X2) | | |
| IC1 -6 | | | NJM4580D-D | IC(OP AMP X2) | | |
| IC7 ,8 | | | TC9164N | MOS-IC | | |
| IC9 | | | TC9162N | MOS-IC | | |
| IC201 | | * | SN761200N | ANALOGUE IC | | |
| IC202 | | | TC74HC4051AP | IC(ANALOG MULTIPLEXER) | | |
| IC203 | | | MC14577CP | ANALOGUE IC | | |
| IC204 | | * | MB90089PF-188 | CUSTOM IC | | |
| IC205 | | | MM1067XD | IC(SYNC SEPARATION) | | |
| IC206 | | * | MB90089PF-188 | CUSTOM IC | MYCTEQ | |
| IC207 | | | MM1067XD | IC(SYNC SEPARATION) | MYCTEQ | |
| IC208 | | | TC74HC4053AP | IC(ANALOG MULTIPLEXER) | MYCTEQ | |
| IC209 | | * | LA7950 | ANALOGUE IC | MYCTEQ | |
| Q1 -6 | | | 2SC2878(B) | TRANSISTOR | | |
| Q7 | | | DTA124ESA | DIGITAL TRANSISTOR | | |
| Q7 | | | UN4112 | DIGITAL TRANSISTOR | | |
| Q8 ,9 | | | 2SC2458(Y,GR) | TRANSISTOR | | |
| Q8 ,9 | | | 2SC3311A(Q,R) | TRANSISTOR | | |
| Q201 | | | 2SC2458(Y,GR) | TRANSISTOR | | |
| Q201 | | | 2SC3311A(Q,R) | TRANSISTOR | | |

**L** : Scandinavia **K** : USA **P** : Canada **R** : Mexico
**Y** : PX(Far East, Hawaii) **T** : Europe **E** : Europe **G** : Germany
**Y** : AAFES(Europe) **X** : Australia **M** : Other Areas **Q** : Russia

⚠ indicates safety critical components.



* New Parts
Parts without **Parts No.** are not supplied.
Les articles non mentionnes dans le **Parts No.** ne sont pas fournis.
Teile ohne **Parts No.** werden nicht geliefert.

30

| Ref. No | Add-ress | New Parts | Parts No. | Description | Desti-nation | Re-marks |
|---|---|---|---|---|---|---|
| Q202 | | | 2SA1048(Y,GR) | TRANSISTOR | | |
| Q202 | | | 2SA1309A(Q,R) | TRANSISTOR | | |
| Q203-205 | | | 2SC2458(Y,GR) | TRANSISTOR | | |
| Q203-205 | | | 2SC3311A(Q,R) | TRANSISTOR | | |
| Q206,207 | | | 2SC2878(B) | TRANSISTOR | | |
| Q208 | | | DTA113ZSA | DIGITAL TRANSISTOR | MYCTEQ | |
| Q208 | | | UN4119 | DIGITAL TRANSISTOR | MYCTEQ | |
| Q209 | | | DTC113ZSA | DIGITAL TRANSISTOR | MYCTEQ | |
| Q209 | | | UN4219 | DIGITAL TRANSISTOR | MYCTEQ | |
| Q210 | | | DTC113ZSA | DIGITAL TRANSISTOR | | |
| Q210 | | | UN4219 | DIGITAL TRANSISTOR | | |
| Q211 | | | DTA113ZSA | DIGITAL TRANSISTOR | | |
| Q211 | | | UN4119 | DIGITAL TRANSISTOR | | |
| Q212 | | | 2SC2458(Y,GR) | TRANSISTOR | | |
| Q212 | | | 2SC3311A(Q,R) | TRANSISTOR | | |
| Q213,214 | | | 2SC2003(L,K) | TRANSISTOR | | |

**L** : Scandinavia **K** : USA **P** : Canada **R** : Mexico
**Y** : PX(Far East, Hawaii) **T** : Europe **E** : Europe **G** : Germany
**Y** : AAFES(Europe) **X** : Australia **M** : Other Areas **Q** : Russia

⚠ indicates safety critical components.

# KR-V999D/1090VR

## SPECIFICATIONS

### *AUDIO section*

Rated power output during STEREO operation

| |
|---|
| 150 watts per channel minimum RMS, both channels driven, at 6 Ω from 20 Hz to 20 kHz with no more than 0.03 % total harmonic distortion.(FTC) |

Rated power output during SURROUND operation

FRONT
(1kHz, 0.7% T.H.D. at 6 Ω) .....150 W + 150 W
CENTER
(1kHz, 0.7% T.H.D. at 6 Ω) .....150 W
SURROUND
(1kHz, 0.7% T.H.D. at 6 Ω) .....150 W + 150 W

Total harmonic distortion .....0.003%(1 kHz, 75W, 6 Ω)
Frequency response
CD .....5 Hz ~ 85 kHz, +0.5 dB, -3 dB
Signal to noise ratio (IHF'66)
PHONO (MM) .....77 dB
CD .....97 dB
Input sensitivity / impedance
PHONO (MM) .....2.5 mV / 47 kΩ
CD .....200 mV / 47 kΩ
Output level / impedance
TAPE REC .....200 mV / 470 Ω
PRE OUT (FRONT, CENTER, SURROUND, SUBWOOFER)
.....1 V / 1.2 kΩ
Tone control
BASS .....±10 dB (at 100 Hz)
TREBLE .....±10 dB (at 10 kHz)
LOUDNESS control
VOLUME at -40dB level ...+7 dB(100 Hz), +3 dB(10 kHz)

### *DIGITAL AUDIO section*

Sampling frequency .....32 kHz, 44.1 kHz, 48 kHz
Input level / impedance / wave length
Optical .....-15 dBm ~ -21 dBm, 600 nm ±30nm
Coaxial .....0.5 Vp-p / 75 Ω

### *VIDEO section*

Video format .....NTSC
VIDEO inputs / outputs
VIDEO (composite) .....1 Vp-p / 75 Ω
S-VIDEO (luminance signal) .....1 Vp-p / 75 Ω
(chrominance signal) .....0.286 Vp-p / 75 Ω

### *FM tuner section*

Tuning frequency range .....87.5 MHz ~ 108 MHz
Usable sensitivity (MONO)
.....1.6uV (75 Ω)/ 15.2 dBf (75 kHz DEV., SINAD 30 dB)
50dB quieting sensitivity
STEREO .....31.6uV (75 W)/ 41.2 dBf
Total harmonic distortion (1 kHz)
(for U.S.A. and Canada)
MONO .....0.2 % (65 dBf input)
STEREO .....0.5 % (65 dBf input)
(except for U.S.A. and Canada)
MONO .....0.6 % (65 dBf input)
STEREO .....0.7 % (65 dBf input)

Signal to noise ratio (1 kHz, 75 kHz DEV.)
MONO .....75 dB (65 dBf input)
STEREO .....68 dB (65 dBf input)
Stereo separation (1 kHz) .....40 dB
Selectivity (±400 kHz)
(for U.S.A. and Canada) .....70 dB
(except for U.S.A. and Canada) .....50 dB
Frequency response .....30 Hz ~ 15kHz,+0.5 dB, -3.0 dB

### *AM tuner section*

Tuning frequency range (for U.S.A. and Canada)
10 kHz step .....530 kHz ~ 1,700 kHz
Tuning frequency range (except for U.S.A. and Canada)
9 kHz step .....531 kHz ~ 1.602 kHz
10 kHz step .....530 kHz ~ 1.610 kHz
Usable sensitivity (30% mod., S/N 20 dB)
.....16 uV / (600 uV/m)
Signal to noise ratio (30 % mod. 1 mV input) .....48 dB

Relay and IR IN/OUT section (for U.S.A. and Canada only)
RELAY CONTROL terminal
Maximum output current .....20 mA
Operating voltage .....12 V
Output impedance .....470 Ω
IR RECEIVER IN terminal
Maximum output current .....20 mA
Operating voltage .....12 V
Output impedance .....470 Ω
IR REPEATER CONTROL terminals
Maximum output current .....20 mA
Operating voltage .....12 V
Output impedance .....470 Ω

Shape of plug to be connected

| IR RECEIVER IN and RELAY CONTROL | IR REPEATER OUT |
|---|---|
| Stereo mini plug<br>Sleeve, Tip, Ring | Mini plug (mono)<br>Sleeve, Tip |

IR IN/OUT specification

| Terminal | IR RECEIVER IN | IR REPEATER OUT |
|---|---|---|
| To Tip | Signal | Signal |
| To Ring | Ground | —— |
| To Sleeve | +12 V | Ground |

RELAY CONTROL specification

| Status | Power off | Power on | Power on and when switch to video input |
|---|---|---|---|
| To Tip | 0 V | 0 V | +12 V |
| To Ring | 0 V | +12 V | +12 V |
| To Sleeve | Ground | Ground | Ground |